IMPERIUM
GLOBAL SOLUTIONS

RING MAIN UNITS

SF6 GAS INSULATED SWITCHGEAR

CELLULES COMPACTES ISOLÉES AU GAZ SF6 (RMU)

IGS-RM · UP TO 17.5 kV · 3-WAY & 4-WAY · INDOOR / OUTDOOR



www.imperiumglobalsolutions.com · info@imperiumglobalsolutions.com · +90 541 541 30 86



About Imperium Global Solutions

Imperium Global Solutions en bref

Imperium Global Solutions was established in 1989. We continue to invest in quality, product development and the use of new technologies, together with innovative and participatory business practices in management and marketing.

Our IGS-RM range of SF6 gas insulated ring main units (RMU) is designed for secondary distribution networks up to 17.5 kV: compact 3-way and 4-way units for indoor and outdoor substations, with load break switches and vacuum circuit breakers, built to IEC 62271-200.

Imperium Global Solutions a été fondée en 1989. Nous poursuivons nos investissements dans la qualité, le développement de produits et l'utilisation de nouvelles technologies, avec une approche innovante et participative de la gestion et du marketing.

Notre gamme IGS-RM de cellules compactes (RMU) isolées au gaz SF6 est conçue pour les réseaux de distribution secondaire jusqu'à 17,5 kV : unités compactes à 3 et 4 voies pour postes intérieurs et extérieurs, avec interrupteurs-sectionneurs et disjoncteurs à vide, selon la norme CEI 62271-200.

1989	17.5 kV	400 / 630 A	IEC 62271-200
Established	**Rated voltage**	**Rated current**	**Applied standard**
Fondée en	Tension assignée	Courant assigné	Norme appliquée

OUR ACTIVITIES / NOS ACTIVITÉS

- **Ring main units (RMU)**
  Cellules compactes RMU
- **Vacuum circuit breakers**
  Disjoncteurs à vide
- **Separable cable connectors**
  Connecteurs de câble séparables

WEBSITE
www.imperiumglobalsolutions.com

EMAIL
info@imperiumglobalsolutions.com

PHONE / WHATSAPP
+90 541 541 30 86

Contents Sommaire

01 **Product Range** / Gamme de produits 4
Gas-insulated RMU · Vacuum circuit breaker · Separable cable connectors

02 **IGS-RM Introduction** / Présentation de l'IGS-RM 6
Solution · Environmental precision · Operating conditions & standards · Application areas

03 **Design** / Conception 10
Switchgear design · Product range · Operating mechanisms · Interlocking · Internal arc withstand

04 **Components & Accessories** / Composants et accessoires 18
Vacuum circuit breaker · Load break switch · Protection relays · Optional features · Technical characteristics

05 **MV Cable Termination** / Raccordement des câbles MT 30
Cable compartment · Bushings · Cable termination

06 **Dimensions** / Dimensions 32
3-way and 4-way compact, indoor and outdoor

07 **Packing & Installation** / Emballage et installation 34
Packing · Handling · Storage · Installation

08 **Smart Solutions** / Solutions intelligentes 42
SCADA / legacy automation · Smart secondary substation

PRODUCT RANGE OF COMPANY

SF6 Gas Insulated Metal Enclosed Switchgear and Controlgear (RMU)



Rated Voltage (kV)	17,5	36
Rated Current (A)	400	630
Rated Short Time Withstand Current (kA/2 sec)	20	16
Loss of Service Continuity	LSC 2A-PM	
Internal Arc Classification	A(FL)–20kA/2sec	A(FL)–16kA/1sec
Applied Standard	IEC 62271-200	

VCB (Vacuum Circuit Breaker)



Rated Voltage (kV)	12	24	36
Rated Current (A)	1250	1250	630
Rated Short Circuit Breaking Current (kA-rms)	20	20	16
Rated Short Circuit Making Current (kA-peak)	50	50	40
Operation Cycle	O-0.3 s-CO-3 min.-CO		
Applied Standard	IEC 62271-100		

Separable Cable Connectors (L-Type, T-Type)





	"T" Type	L" Type
Rated Voltage (kV)	36	36
Rated Current (A)	630	250;400
Interface	C	B; C
Contact Type	Bolted	Sliding
Screened / Unscreened	Screened	
Applied Standard	HD 629.1S2; HD 61442	

IGS-RM **SOLUTION**

IGS-RM units are designed for supplying sustainable energy, protecting electrical equipment in secondary distribution networks up to 17,5 kV. IGS-RM units are the best solution for indoor/outdoor distribution substations and with their compact design; they suit various network applications such as transformer substations, wind power plants, industrial zones, etc. Namely, IGS-RM SF6 gas insulated units offer the following;

1- Compact design up to 17,5 kV; KEMA type tested
2- Switching units sealed in SF6 gas filled stainless steel tank
3- High level operator safety and operating reliability
4- With embedded cable testing compartment, easy and safe cable testing without cable connection removal
5- High quality tank welding, leakage rate of less than %0.1 per year
6- Maintenance free unit offering life expectation of over 30 years
7- Smart interlocking with padlocking system for maximum operator safety
8- Different feeder combinations with switch disconnector and vacuum circuit breaker
9- Suitable with SCADA systems for remote control and monitoring
10- Motorized options for circuit breakers and switches
11- High resistance to pollution and humidity



ENVIRONMENTAL PRECISION

Using SF6 gas inside the switchgears contributes to improved reliability, safety and easy maintenance of IGS-RM units during its life cycle. Besides, SF6 gas is still the smallest contributor to global warming among greenhouse gases with its 0.1% concentration rate *(refer to Table 1)*. Even if using SF6 gas in electrical equipment remains one of the least harmful solution for environment, utilities, some of the governments necessitate SF6 disposal methods for gas insulated RMUs at the end of its life time.

The approved procedure of treatment includes;

- Collection of SF6 on site with industrial waste treatment equipment,
- Heating of SF6 at above 1,000°C at partner companies approved facility,
  (At these temperatures, SF6 starts to dissociate into reactive fragments, which interact with appropriate partner chemicals, mainly hydrogen and oxygen to form SO2 and HF.)
- Removal of HF and SO2 by passing through a calcium hydroxide solution,
- Neutralization of the acids and forming up of solid sulfates and fluorides,

SF6 gas can thus be destroyed with a removal efficiency greater than 99%.

Greenhouse gas	Concentration (parts per billion)	Concentration Percentage
CO_2	353.10^3	60%
CH_4	17.10^3	15%
N_2O	310	5%
O_3	10.50	8%
CFC-11	.28	4%
CFC-12	.48	8%
SF_6	.002	.1%

Table 1: Concentration Percentages of Greenhouse Gases

OPERATING CONDITIONS & STANDARDS

IGS-RM has embedded hermetically-sealed gas tank filled with SF6 gas having minimum pressure of 1.1 bar. Expected life time of product is more than 30 years with leakage rate of less than 0.1 % per year. No of SF6 gas or maintenance of live parts are required throughout IGS-RM lifetime refills.

The main busbar and switching compartment has IP 67 protection degree whereas remaining sections of indoor products have IP 41 and outdoor products have IP 54.

IGS-RM fully complies with the following IEC standards used for general operation conditions for indoor switchgears;

Operating Conditions

- Ambient temperature range from -25 °C to 40 °C
- Altitude range of
  - * 0-1000 m
  - * For 1000+ m please contact IGS
- Maximum relative humidity of 100%

Switchgear Standards

- IEC-62271-1
  - * Verified lightning impulse withstand voltage
  - * Maintenance free under indoor ambient conditions
- IEC-62271-200
  - * Internal Arc Classification of Accessibility Type A, Classified Type FL for 21 kA 1 sec (indoor), Classified Type FLR for 21 kA 1 sec (outdoor)

Switch-Disconnector Standards

- IEC-62271-103
  - * Class M1 / E3 / E0
  - * 100 CO cycles at rated current and 0.7 p.f.
  - * 1000 mechanical opening operations

Circuit Breaker Standards

- IEC-62271-100
  - * Class M1/E1
  - * 2000 mechanical opening operations
  - * O-0.3 sec.-CO-3 min.-CO cycle

Other Standards

- IEC-62255 for electrical relays
- IEC-62271-102 for alternating current earthing switch
- IEC 61243-5 for voltage detection system

APPLICATION AREAS

IGS-RM *units are widely used in below application areas;*

Infrastructure and buildings: ports, railway stations, airports, hospitals, schools, hotels, malls, commercial centres, holiday resorts etc.

Industries: water, iron and steel, automotive, oil and gas etc.



Energy: wind power plants, solar power plants, hydro power plants, secondary distribution networks, transformer substations etc.



Special applications: high air pollution areas, high humidity areas etc.



SWITCHGEAR DESIGN

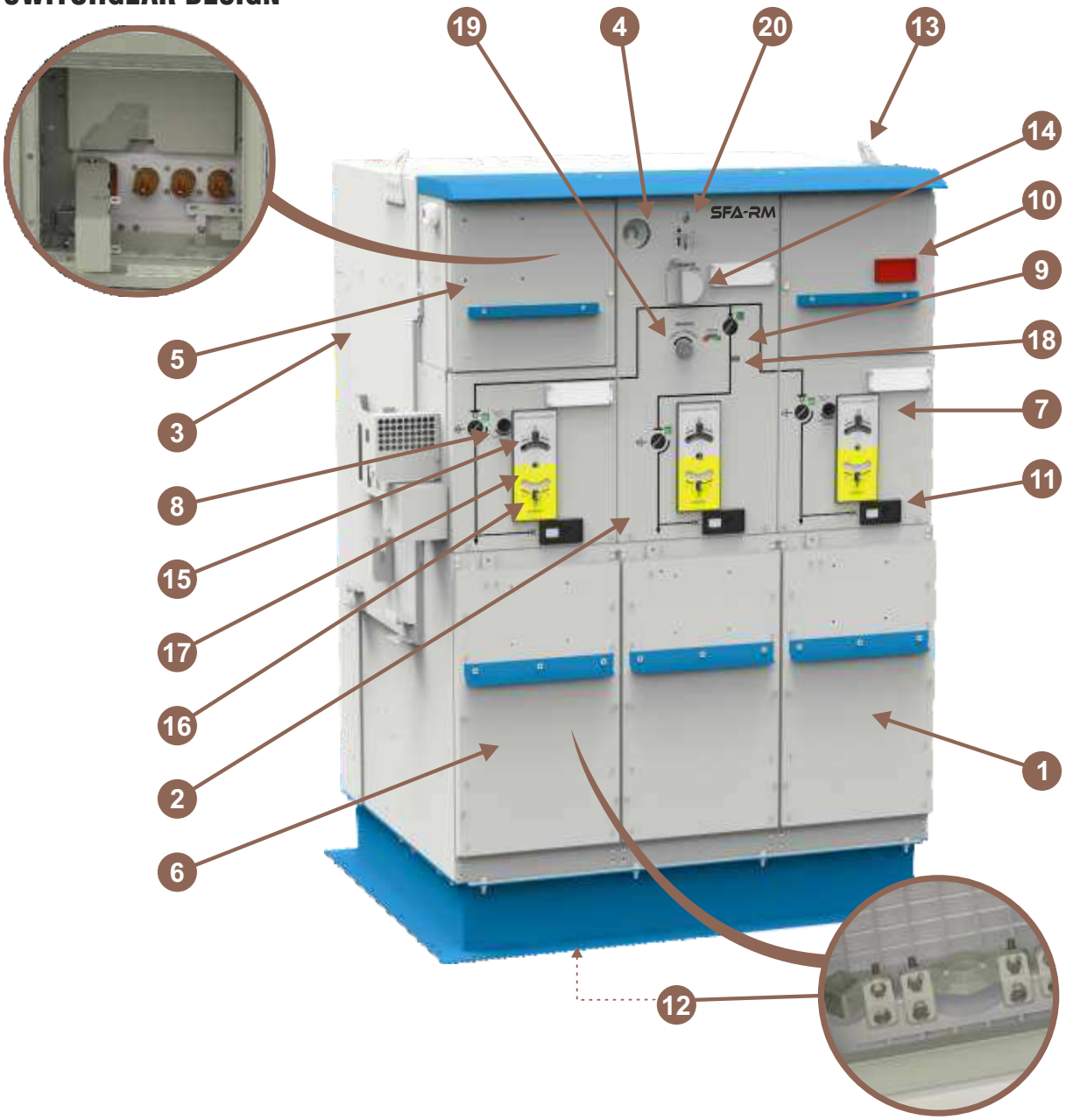

1. Feeder function.
2. Vacuum Circuit Breaker function.
3. Gas tank.
4. Gas pressure indicator
5. Cable test compartment.
6. Cable compartment.
7. Switch-disconnector operation (motor*).
8. Interlocking latch for cable test compartment
9. Circuit Breaker operation (motor*).
10. Relay.

**Optional*

11. Voltage presence - absence indicator.
12. MV cable fixing support.
13. Lifting lugs
14. Operating latch for vacuum circuit breaker
15. Podlocking facilities for load break switch
16. Podlocking facilities for earting switch
17. Load break switch operating mechanisim
18. Mechanical numeric indicator
19. Vacuum circuit breaker operating mechanisim
20. Padlocking facilities for vacuum circuit breaker

IGS-RM units have following elements;

1- SF6 filled stainless steel tank, containing busbars, load break switch, vacuum circuit breaker
2- Operating mechanism compartment
3- Cable compartment
4- LV and cable testing compartments
5- Operating panel with mimic diagram, actuators



Figure 2: Elements of IGS-RM *Unit*

IGS-RM **PRODUCT RANGE**

Compact IGS-RM units are excellent solutions for secondary distribution networks. They cover all medium voltage functions such as connection, supply and protection of MV equipments for different applications.

SBS 3-Way Compact Indoor Type RMU



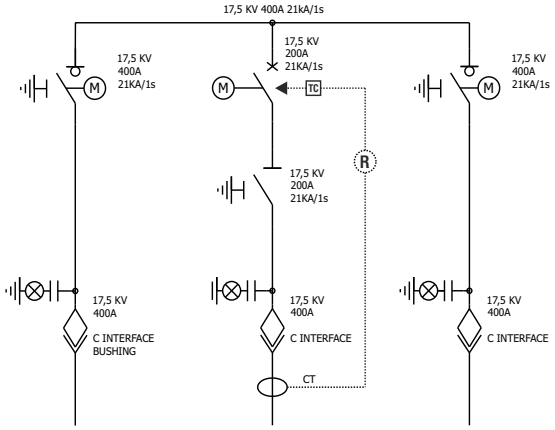

Figure 3: 17,5kV, 2 ring switches / 400 A + 1 vacuum circuit breaker / 200 A ; front view and single line diagram

SBS 3-Way Compact Outdoor Type RMU



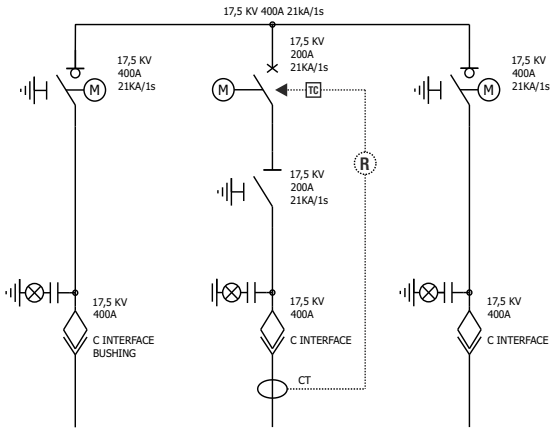

Figure 4: 17,5 kV, 2 ring switches / 400 A + 1 vacuum circuit breaker / 200 A ; front view and single line diagram

SBBS 4-Way Compact Indoor Type RMU



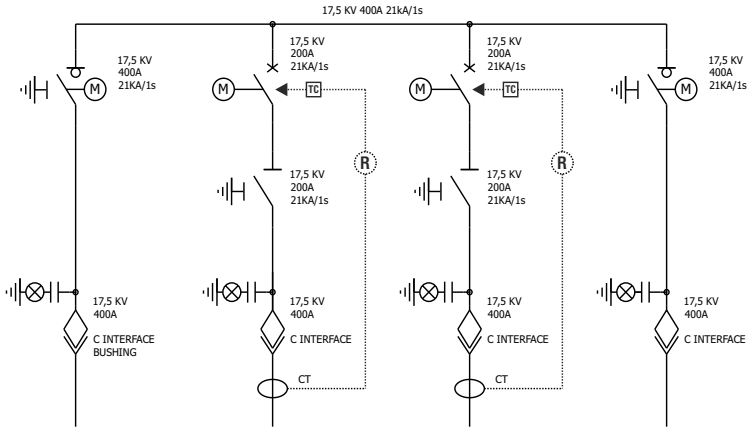

Figure 5: 17,5 kV, 2 ring switches / 400 A + 2 vacuum circuit breakers / 200 A ; front view and single line diagram

SBBS 4-Way Compact Outdoor Type RMU



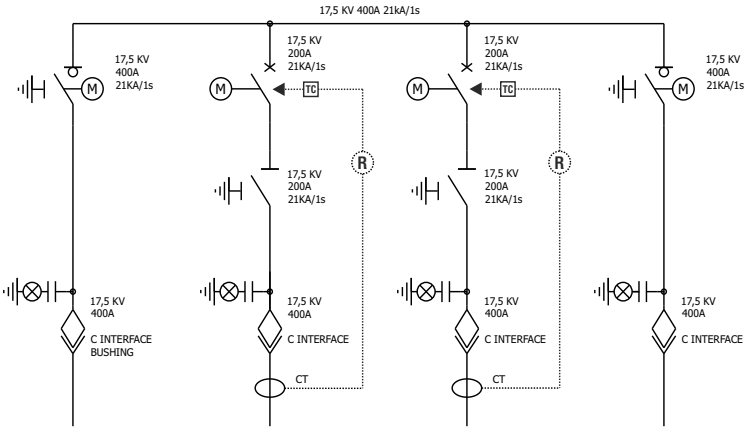

Figure 6: 17,5 kV, 2 ring switches / 400 A + 2 vacuum circuit breakers / 200 A ; front view and single line diagram

SSBS 4-Way Compact Indoor Type RMU



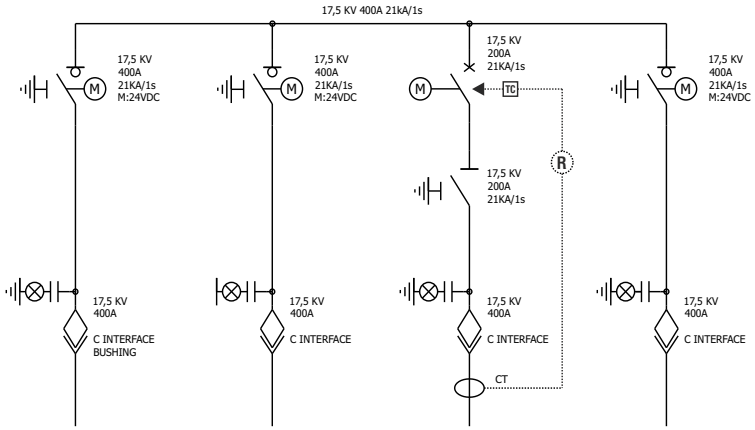

Figure 7: 17,5 kV, 3 ring switches / 400 A + 1 vacuum circuit breaker / 200 A ; front view and single line diagram

SSBS 4-Way Compact Outdoor Type RMU



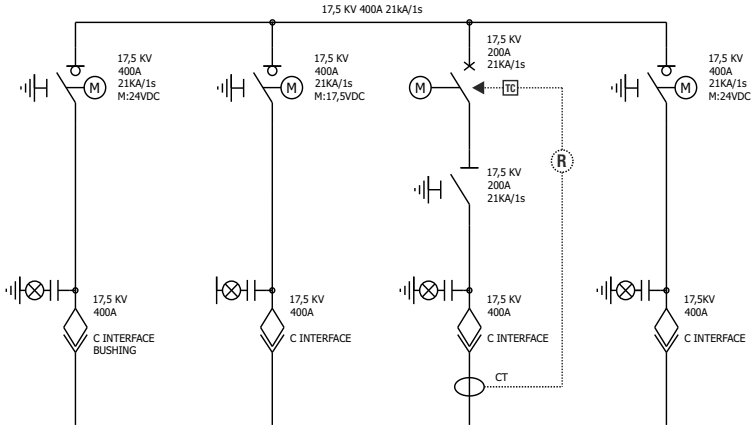

Figure 8: 17,5 kV, 3 ring switches / 400 A + 1 vacuum circuit breaker / 200 A ; front view and single line diagram

OPERATING MECHANISMS

On the front panel of IGS-RM units, status of the operating mechanisms can be seen clearly from the mimic diagram (closed, opened, earthed):

- Proved operating mechanism stimulates the moving contact assembly during closing. The opening spring of circuit breaker mechanism is charged while closing operation is in process.
- The same mechanism is used for opening of the circuit breaker. Opening is activated by a latch or a relay.

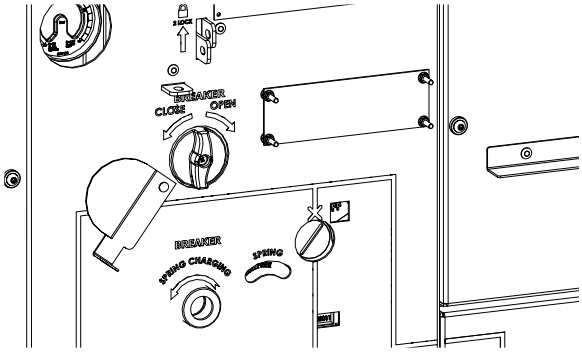

Figure 9: Circuit Breaker Mimic Diagram

- Earthing contacts are opened or closed with a specific operating shaft. The access hole of the shaft is covered by a plate, which can be opened if the load break switch or circuit breaker is in open position, and remains locked when it is in close position.

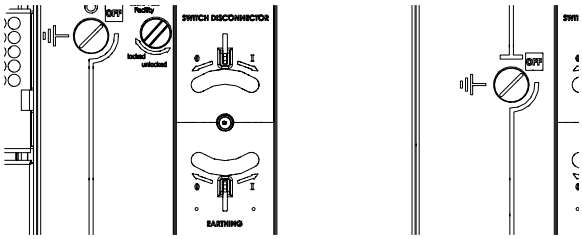

Figure 10: Switch Disconnector Mimic Diagram

- Since the operating shafts are directly connected to status indicators, it is very easy and safe to understand the position of the switches from the front panel.
- Operating shaft outlets of load break and earthing switches are physically separated from each other to ensure a natural time delay to prevent unintentional operations.
- Padlocking facilities are available for preventing access to load break switch, circuit breaker and earthing switch operating shafts.

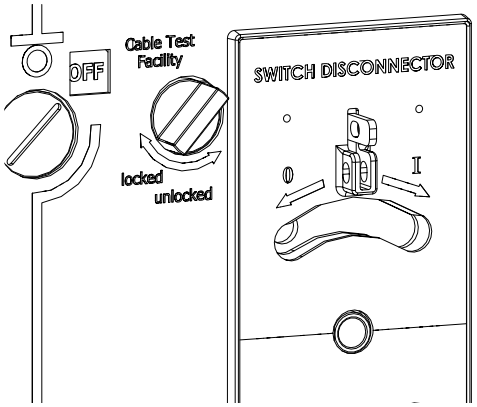

Figure 11: Switch Disconnector Padlocking Facility

Interlocking System

- Accesses to load break switch, circuit breaker and earthing switch are separated from each other to enforce safety. The cover for earthing switch can be opened only if the load break switch or circuit breaker is in open position.
- Access to cable compartment is fully interlocked with the earthing switch. Access to cable compartment is only possible when earthing switch is in close position.

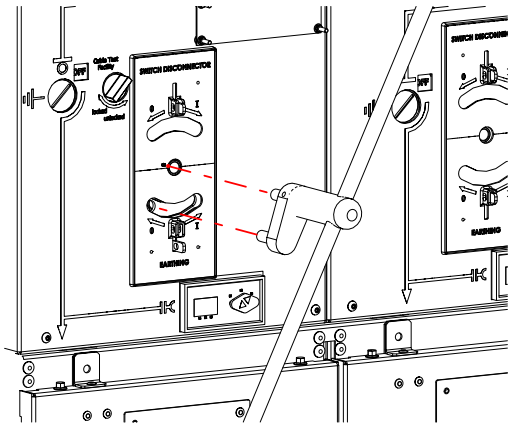

Figure 12: Earthing Switch Interlockings

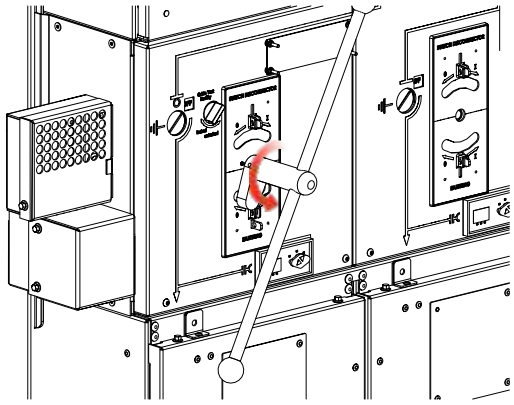

Figure 13: Earthing Switch Closing Operation

- The cable test compartment can be opened only if the earthing switch is in close position.

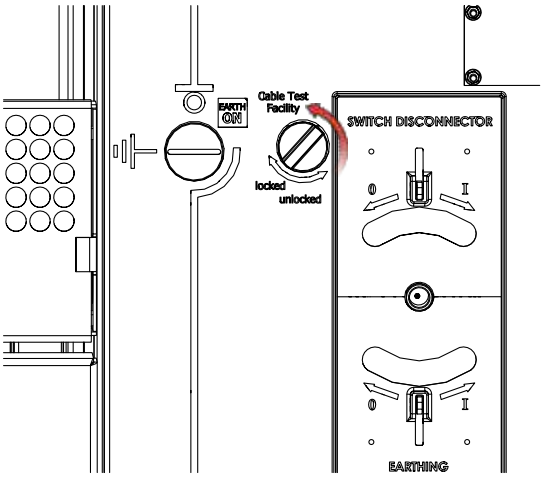

Figure 14: Unlocking of Cable Test Compartment

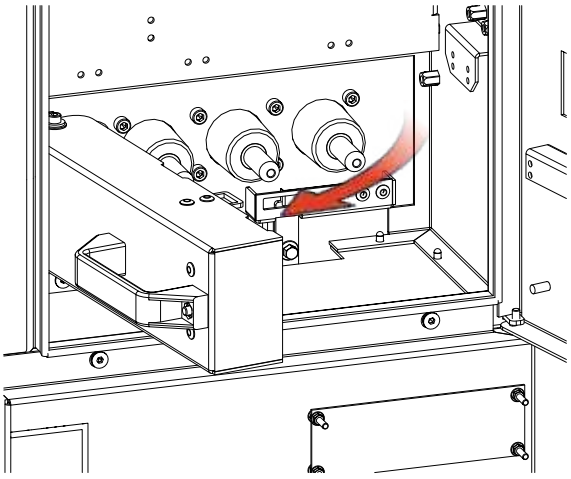

Figure 15: Opening of Cable Test Compartment

INTERNAL ARC WITHSTAND

IGS-RM units are designed to withstand internal arc inside the tank for 1 second without any danger. Overpressure in the gas tank due to the internal arc is limited by the help of safety valve located at the bottom of the stainless steel tank.

Regarding the internal arc in cable compartment, the withstand capability of the IGS-RM units are also proven at KEMA laboratories complying with all clauses of IEC 62271-200 standard to ensure maximum operator safety.



Figure 16: A Picture Taken During the Internal Arc Test of 17,5 kV IGS-RM

COMPONENTS

Vacuum Circuit Breaker

Standard Features

- Complying with the related standard- IEC 62271-100
- Contacts are in vacuum tubes and the remaining parts are in SF6 gas filled tank in isolation from climate conditions
- Spring charge hole on the front panel with a spring position indicator
- Operating latch for opening or closing operations
- Spring operated, stored energy mechanism
- Operation independent of operator
- Padlocking facility on front panel to prevent unwanted closing operation
- Smart mimic diagram indicating the switching status clearly (ON, OFF)
- A mechanical numeric indicator counting operation cycles
- Coloured position indication bar directly connected with operating shaft
- Trip coil for initiating the tripping operation via signal from self-powered relay
- Electrical endurance: E1
- Mechanical endurance: M1

Optional Features

- Motor operation
  * For circuit breaker: 24 VDC, 110 VDC or 220 VAC
- Compatible with intelligent systems (SCADA, DAS, etc)
- Auxiliary contacts for position indication
  *For circuit breaker: 8 NO and 8 NC
  *For earthing switch: 2 NO and 4 NC

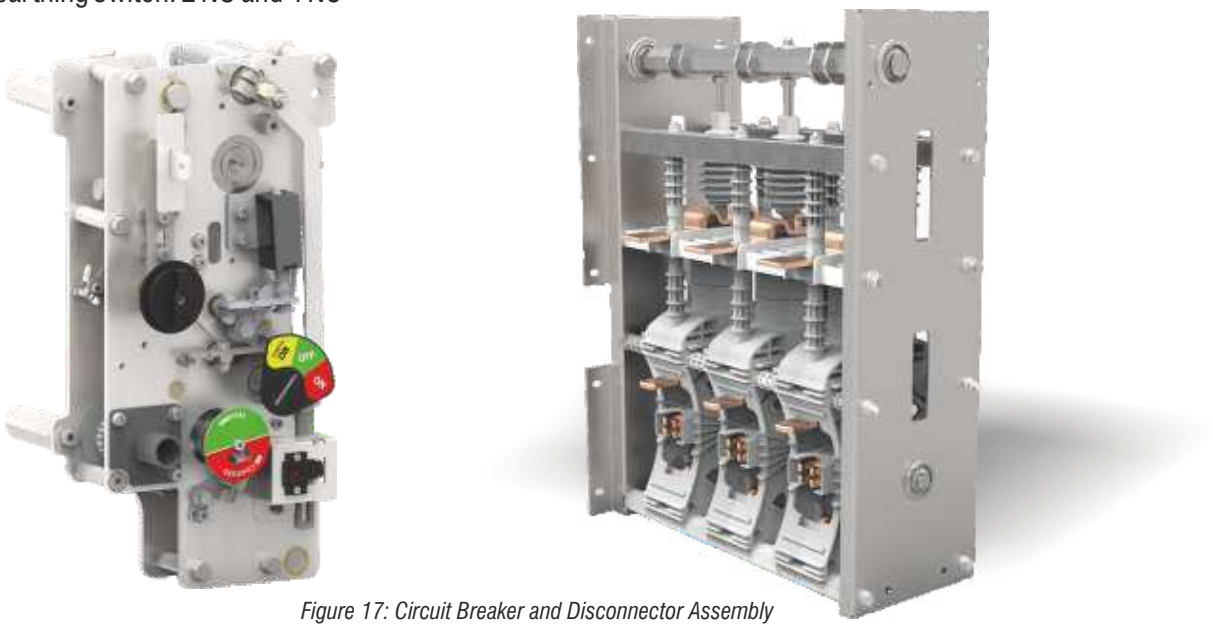

Figure 17: Circuit Breaker and Disconnector Assembly

Three Position Load Break Switch

Standard Features

- Complying with the related standards- IEC 62271-103 and IEC 62271-102
- Contacts are in SF6 gas filled tank independent from climate conditions
- Three phased and three positioned (ON, OFF and Earthing) switching mechanism
- Two separate holes on the front panel for Earthing and Disconnecting functions for safe operation
- Spring operated stored energy mechanism
- Independent of the operator operation
- Padlocking facilities on front panel for both Earthing and Disconnecting functions of operation
- Smart mimic diagram indicating clearly the switching status (ON, OFF, Earth position)
- Coloured position indication bar directly connected with operating shaft
- Interlocking latch for accessing the cable testing compartment
- Switch-disconnector electrical endurance: E3
- Switch-disconnector mechanical endurance: M1
- Earthing switch electrical endurance: E0
- Earthing switch mechanical endurance: M1

Optional Features

- Motor operation
  * For load break switch: 24 VDC, 110 VDC
- Compatible with intelligent systems (SCADA, DAS, etc)
- Auxiliary contacts for position indication
  *For load break switch: 4 NO and 7 NC
  *For earthing switch: 3 NO and 8 NC

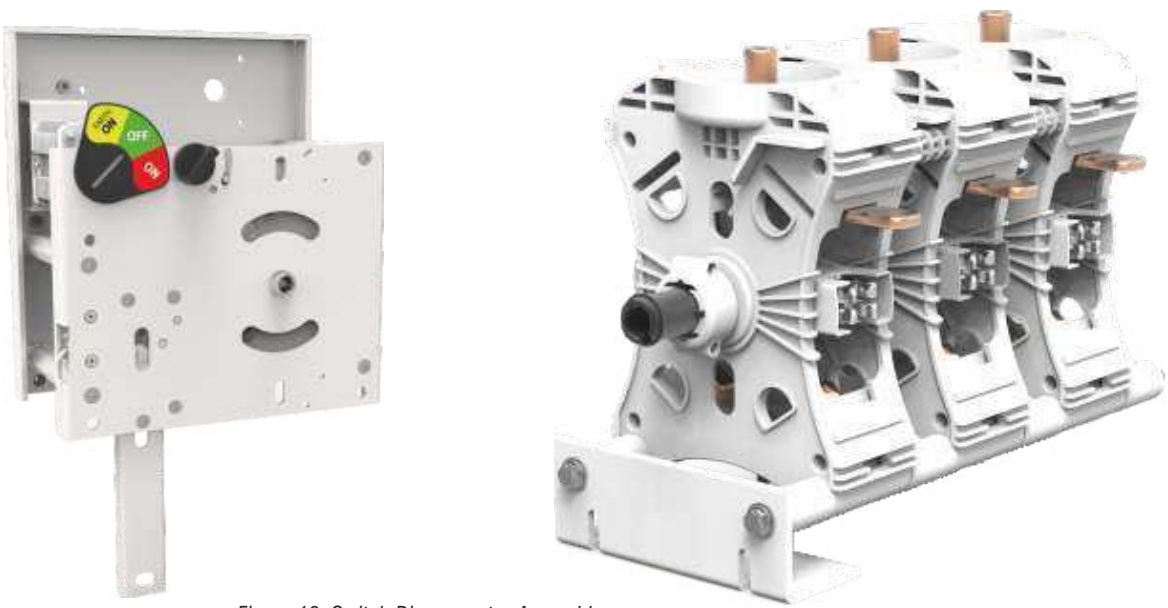

Figure 18: Switch Disconnector Assembly

Cable Testing Compartment

For IGS-RM units; the operator does not need to access cable compartment for cable testing. IGS-RM units offer a safe way for cable testing from the easily accessible cable testing compartment on the front panel (Refer to *Figure 19*). Operators can easily make cable testing through plug-in type connectors after removing the earthing bar. Cable test compartment is safely interlocked and can be reached only if the switch or disconnector is in earthed position.

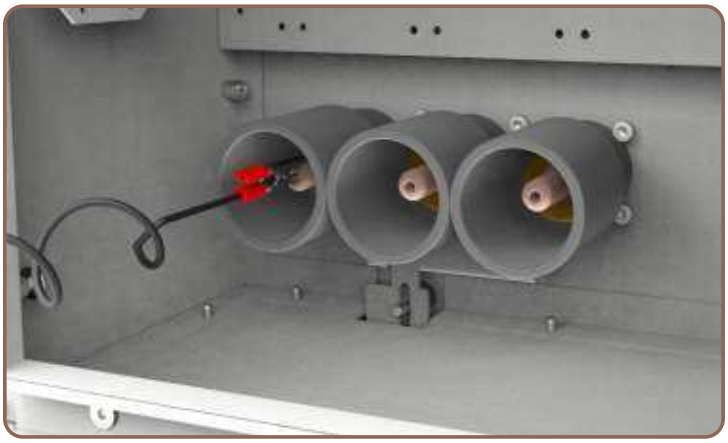

Figure 19: Front View of Cable Testing Compartment

ACCESSORIES

Gas Pressure Indicator

Gas density is an important operating parameter for SF6 insulated MV equipments. If the required gas density is not sufficient, safe operation can not be guaranteed. Hence on IGS-RM units, a gas pressure indicator is fitted to tank for providing reliable warnings against dangerously low gas levels. Gas pressure indicator has sections to show the minimum pressure for safe operation.



Voltage Presence Indication System



All IGS-RM units are integrated with voltage presence indication system. A voltage signal comes from the VPIS through the voltage divider positioned into cable enterance of bushings. VPIS can be used to check whether a voltage is present across the cables or not.

Operating Handles

In IGS-RM units, there are two operating handles; the first one is for operation of load break switch and the other one is for operation of vacuum circuit breaker. Design of operating handles enables the user to make easy and safe operations.



Figure 20: Switch Disconnector & Disconnector Operating Handle



Figure 21: Circuit Breaker Spring Charging Handle

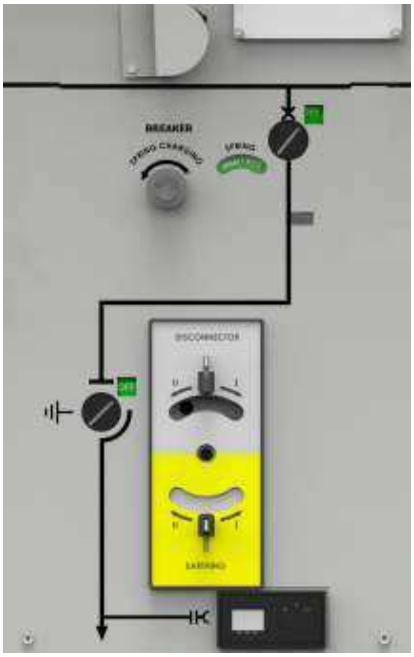

Mimic Diagram

The mimic diagram on the front panel corresponds with the switching functions of the switchgear. The position of load break switch, earthing switch and circuit breaker can easily and clearly be identified by trusting this safe solution. The indicators are coupled mechanically directly to the operating shaft, leading precise and safe indication.

Protection Relays

IGS-RM units have self-powered relays for fault protection. The current information received from current transformers are used by relays to trip mechanism or not. Dependence on external power source is eliminated by reliable self-powered relays. These relays have great variety of features such as overcurrent protection, earth faults, observance and isolative optimization of tripping curve, discrimination with LV circuit breakers.

For overcurrent protection, features are as follows;

1- 50P Function: Phase instantaneous overcurrent

Time of operation is independent of the current of operation flowing through the relay, hence if the phase current increases more than its determined value for an equal or greater amount of time than, the set value, then protection function activates (trips) and does not reset itself till the value of the phase drops below the point of current pick-up. The function activates at 100% of the preset input, and deactivates at 95%. The reset is instantaneous. The accuracy of the operating time is equal to the preset time plus a maximum of 30 ms.

2- 51P Function: Phase inverse time overcurrent



If the option "Defined time" is selected for the curve setting, the unit behaves like an instantaneous overcurrent unit. In this case, the unit operating time is set by the parameter "Operating time". If a curve (e.g. inverse, very inverse or extremely inverse refer to *Figures 23, 24 & 25 respectively*) is selected for the curve setting, the operating time depends on the curve, dial and tap settings.

If the unit operates with defined time, the function is activated at 100% of the set tap value, and it deactivates at 95%. If the unit operates with a curve, the function is activated at 110% of the set pick-up value, and it deactivates at 100%. The reset is instantaneous in both cases. The activation time is accurate to ±5% or ±30ms, whichever is greater, of the theoretical activation time. The curves used are IEC 60255-151, which are described in the "Curves" section.

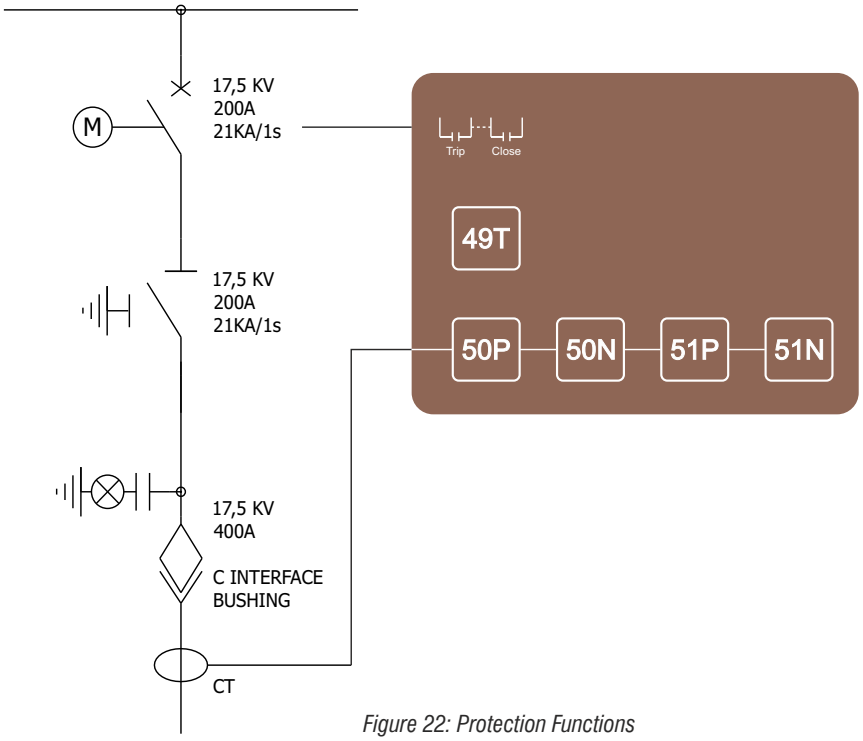

Figure 22: Protection Functions

3- 50N Function: Neutral instantaneous overcurrent.

The operating time is completely independent of the operating current that flows through the equipment; therefore if the neutral current exceeds its predetermined value for an equal or greater amount of time than this preset value, the protection function activates (trips) and does not reset itself until the value of the neutral drops below the point of current pick-up. The function activates at 100% of the preset input, and deactivates at 95%. The reset is instantaneous. The accuracy of the operation time is equal to the preset time plus a maximum of 30 ms.

4- 51N Function: Neutral inverse time overcurrent.



If the option "Defined time" is selected for the curve setting, the unit behaves as an instantaneous overcurrent unit. In this case, the unit operating time is adjusted by using the parameter "Operating time". If a curve (e.s. inverse, very inverse or extremely inverse) is selected for the curve setting, the operating time depends on the curve, dial and pick-up settings. If the unit operates as defined time, the function is activated at 100% of the set pick-up value, and it deactivates at 95%. If the unit operates with a curve, the function is activated at 110% of the set pick-up value, and it deactivates at 100%. The reset is instantaneous in both cases. The activation time is accurate to ±5% or ±30ms, whichever is higher, of the theoretical activation time. The curves used are IEC60255-151, which are described in the "Curves" section.

5- External trip:

The equipment has a direct trip input, normally connected to a bimetallic contact fitted to the power transformer. This serves as backup to the overcurrent functions. The input is operative from 0.2 times the single phase secondary nominal current. It allows the connection of a bimetallic free potential contact. When this contact closes, it activates the input. This input is especially protected against magnetic noise.

The relays used in IGS-RM units comply with the curves shown in standard IEC60255-151:

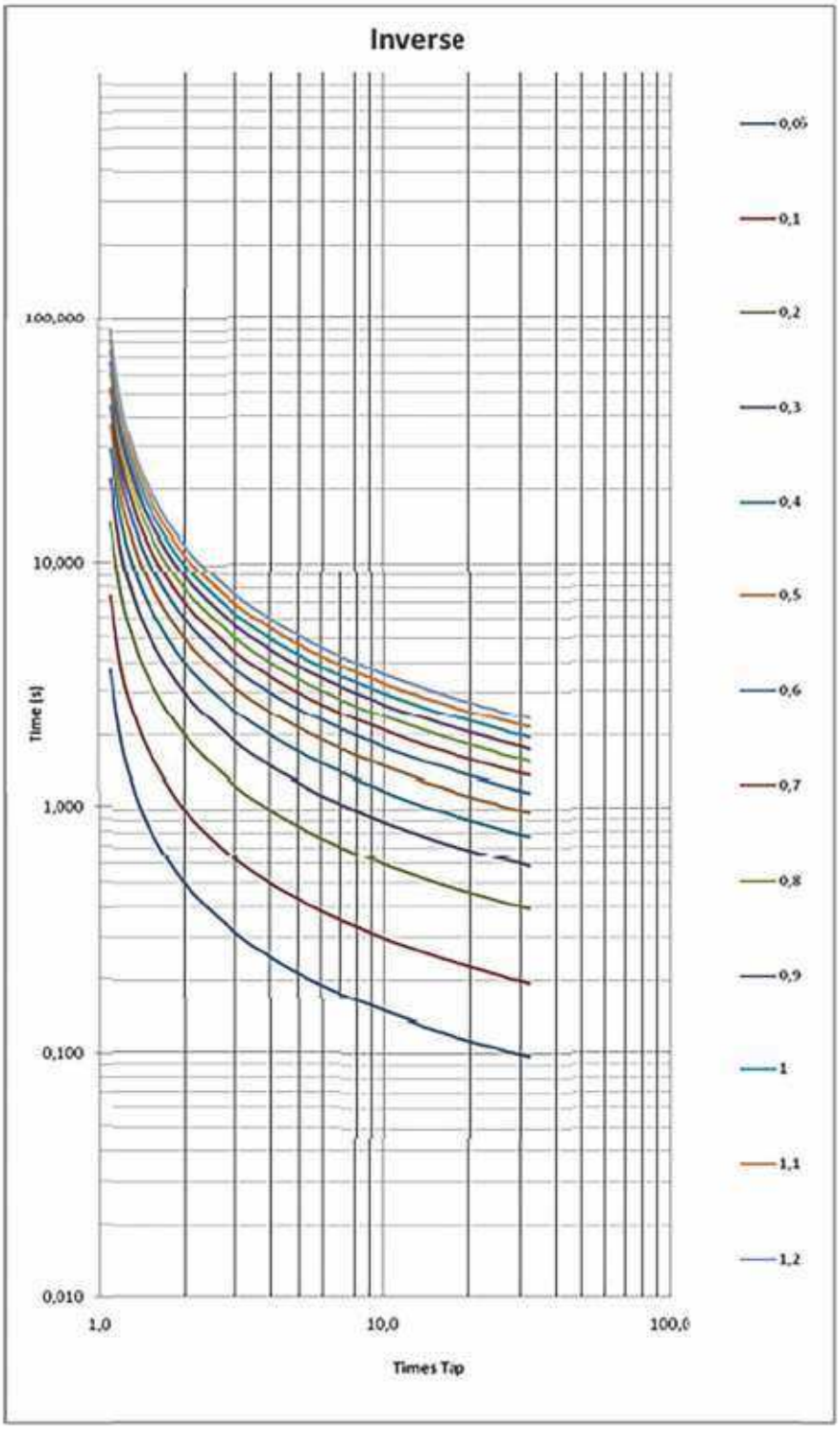

Figure 23: Inverse Curve

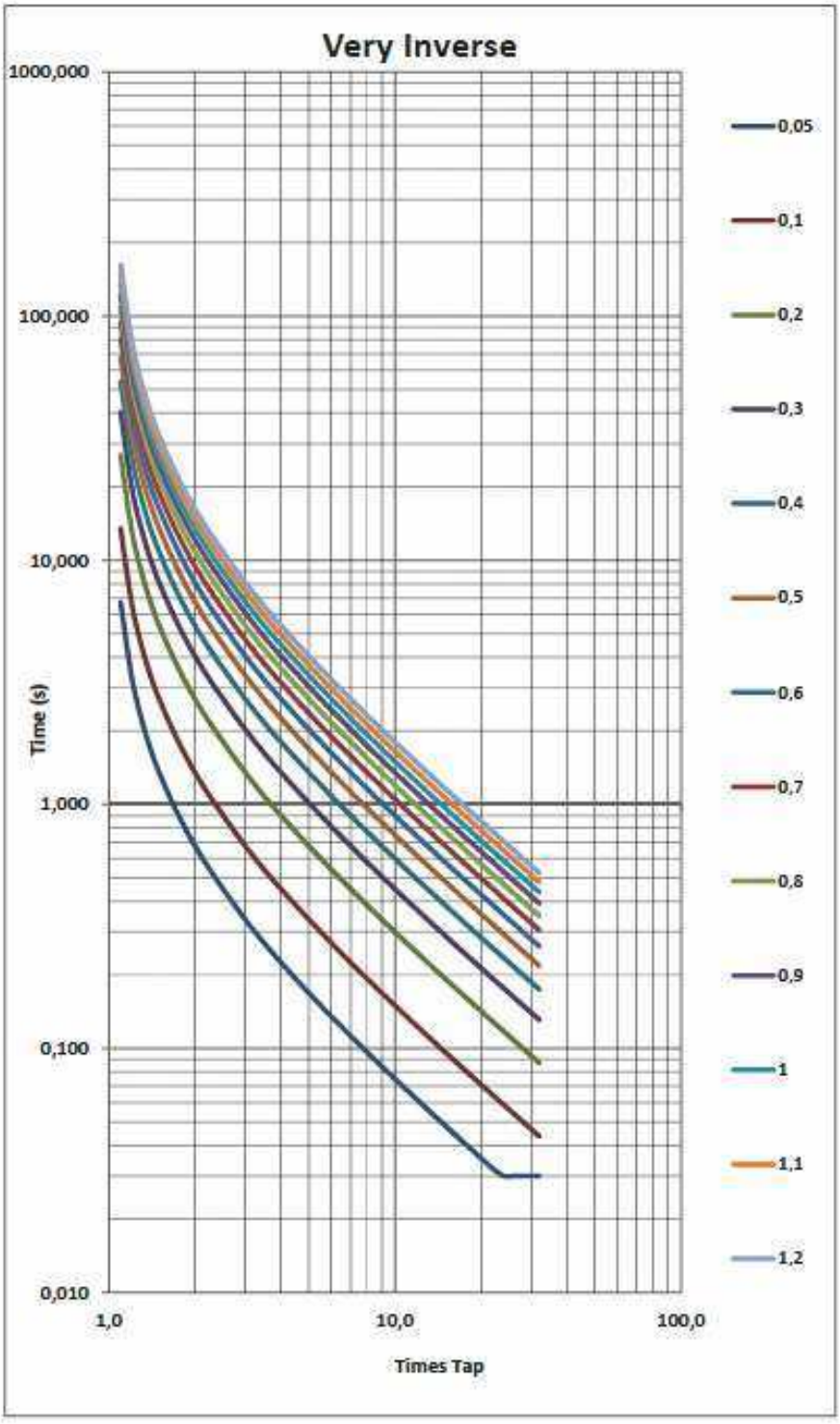

Figure 24: Very Inverse Curve

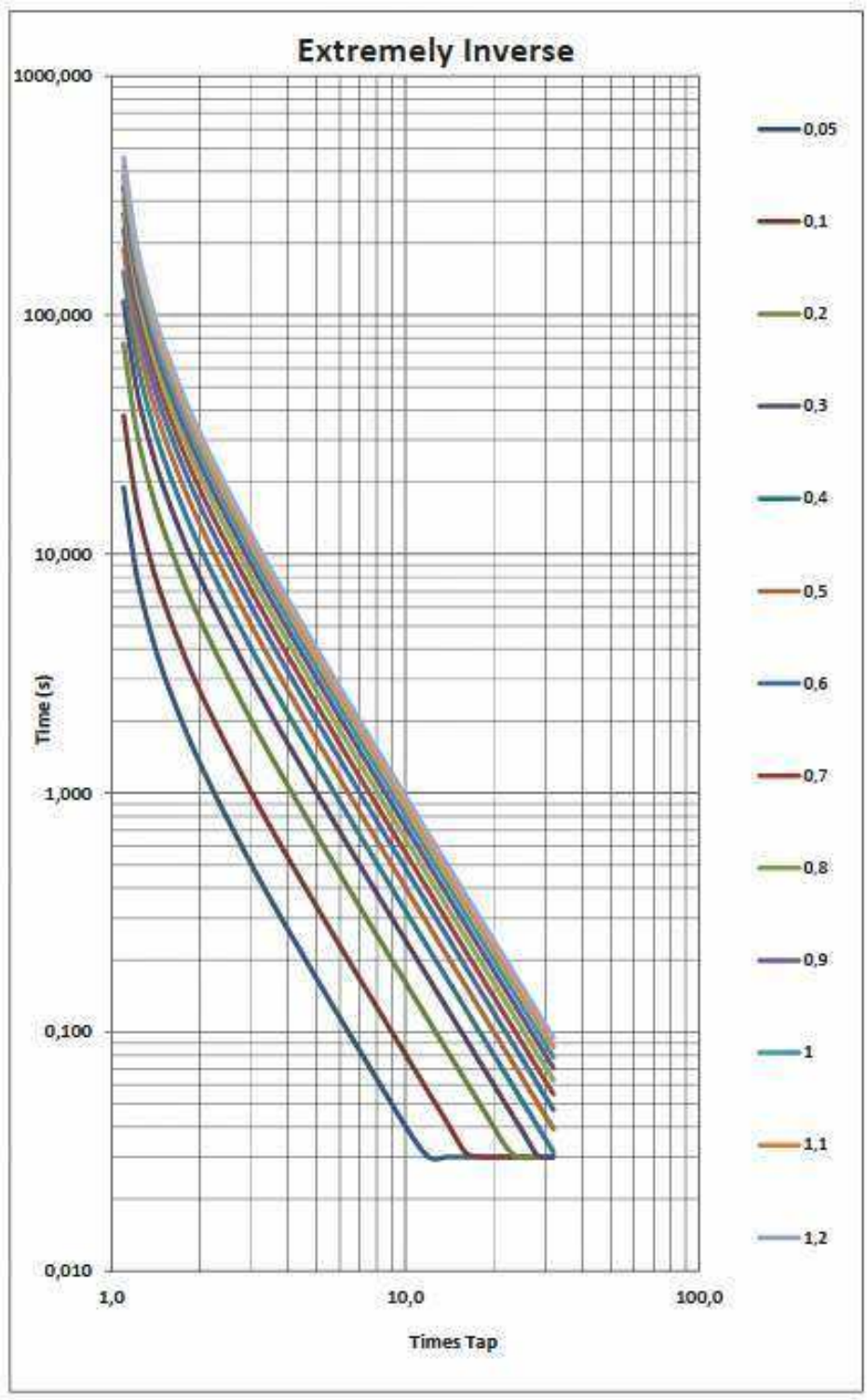

Figure 25: Extremely Inverse Curve

OPTIONAL FEATURES

SCADA and Motor Mechanism

Motors with gearboxes can easily be installed to load break switch and circuit breaker mechanisms either in the factory or on site. Built-in electrical interlocking system prevents any unintentional operations. When the unit is installed with motor mechanism, it can be used with intelligent systems such as SCADA, DAS,etc. With the help of selector switch, IGS-RM units can be controlled also remotely by choosing remote control option.



Figure 26: Motor with Gearbox



Figure 27: Remote Control Unit

Earth Fault Indicator (EFI)

EFI can also be implemented to IGS-RM units. EFIs help the operator to find the fault location easily in medium voltage ring networks. Hence, they minimize the downtimes. Earth fault is indicated with a flash light when asymmetrical currents are detected in three phase cables. Auxiliary supply and current transformer supported battery versions are available. EFIs can be mounted either on the front panel or side of the unit.



Figure 28: EFI

Operation Counter for Load Break Switch Mechanism

In IGS-RM units, implementation of operation counter for mechanical operation of load break switches is available as option.

Voltage Detection Relays

IGS-RM units are also compatible with voltage detection relays as option. Voltage detection relays detect the voltage and run “absence of voltage” and “presence of voltage” functions.

- Absence of voltage applications
  - Automation on voltage loss
  - Alarms on voltage loss
  - Automatic transfer systems
- Presence of voltage applications
  - Earth locking on presence on voltage
  - Alarms on voltage presence



Figure 29: Sample View of Voltage Detection Relays

Gas Pressure Indicator with Contacts

As optional feature; gas pressure indicator with electrical switch contacts can be implemented. It warns the operator and it can even block the operation when the gas density drops below defined “alarm” level.



Figure 30: Sample View of Gas Pressure Indicator

TECHNICAL CHARACTERISTICS

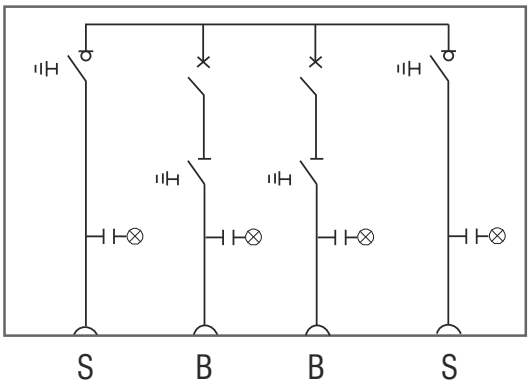



Rated Voltage		17,5 kV
Busbar Rating		400 / 630 A
Rated Frequency		50 / 60 Hz
Rated Nominal Current For Ring Switch		400 A / 630 A
Rated Nominal Current For Tee-off Feeder		200 A
Rated Short Time Withstand Current		21 kA / 1s
Internal Arc Classification		A (FL) 21kA / 1s - *Indoor* / A (FLR) 21kA / 1s - *Outdoor*
Rated Flling SF6 Gas Level For Insulation		1,2 bar (absolute)
Minimum Functional SF6 Gas Level		1,1 bar (absolute)
Relative Humidity		100%
IP Class (Gas Tank / Indoor / Outdoor)		IP 65/ IP41 / IP54
Rated Lightning Impulse Withstand Voltage		95 / 110 kV-peak
Rated Power Frequency Withstand Voltage		38 / 45 kV-rms
Dimensions (Witdh X Depth X Height) (SBS)		1150 x 900 x 1500 mm
Applied Standard		IEC 62271-100
Ring Switch Feeder (S)	Type of Switch-Disconnector	Three-positioned (OPEN-CLOSED-EARTHED)
	Electrical Endurance Switch-Disconnector/Earting Switch	E3 / E0
	Mechanical Endurance	M1
	Nominal Current	400 A / 630 A
	Short-Circuit Making Current	21 kA (also valid for earthing switch) 54.6 kA Peak
	Applied Standard	IEC 62271-103 / IEC 62271-102
TEE-OFF Feeder (B)	Type of Breaker	Vacuum
	Electrical Endurance	E1
	Mechanical Endurance	M1
	Nominal Current	200 A
	Short-Circuit Breaking Current	21 kA
	Applied Standard	IEC 62271-200

Cable Compartment

For safe operations , cable compartment of IGS-RM units have interlocking mechanism for preventing access to cable compartment when the earthing switch is in open position. Furthermore, when the panel of cable compartment is open, closing of load break switch or circuit breaker prevented by an additional interlocking mechanism. As option, increasing the depth of cable compartment is also possible for a lightning arrester installation. Internal Arc Withstand Capacity of cable compartment is proven by type tests performed in KEMA Laboratories.



Figure 31 : Sample View of Cable Compartment

Bushings

Electrical current is carried from outside to inside of RMU via epoxy bushings ensuring the insulation between the energized conductor and the tank of RMU. Power frequency and partial discharge tests are conducted to each bushing used in IGS-RM units. There are 3 types of bushings on IGS-RM units:



RMT17,5 RMS17,5 RMB17,5

Figure 32 : Various Bushing Types

Bushing Type	Application	Applicable Standard	Interface Type	Material	Current Rating	Voltage
RMT17,5	Cable Testing	IEC 60137	-	Epoxy Resin	-	17,5/50/125kV
RMS17,5	Load Break (S) Circuit Breaker (B)	IEC 60137	C	Epoxy Resin	630A, 21kA/1s	17,5/50/125kV
RMB17,5	Circuit Breaker (B)	IEC 60137	C	Epoxy Resin	630A, 21kA/1s	17,5/50/125kV

Cable Termination

The following types of cable terminations are available within IGS-RM units;



Figure 33: "L - Type" Cable Termination Alternatives

IGS-RM bushings are suitable with various connections of cables through separable cable connectors:

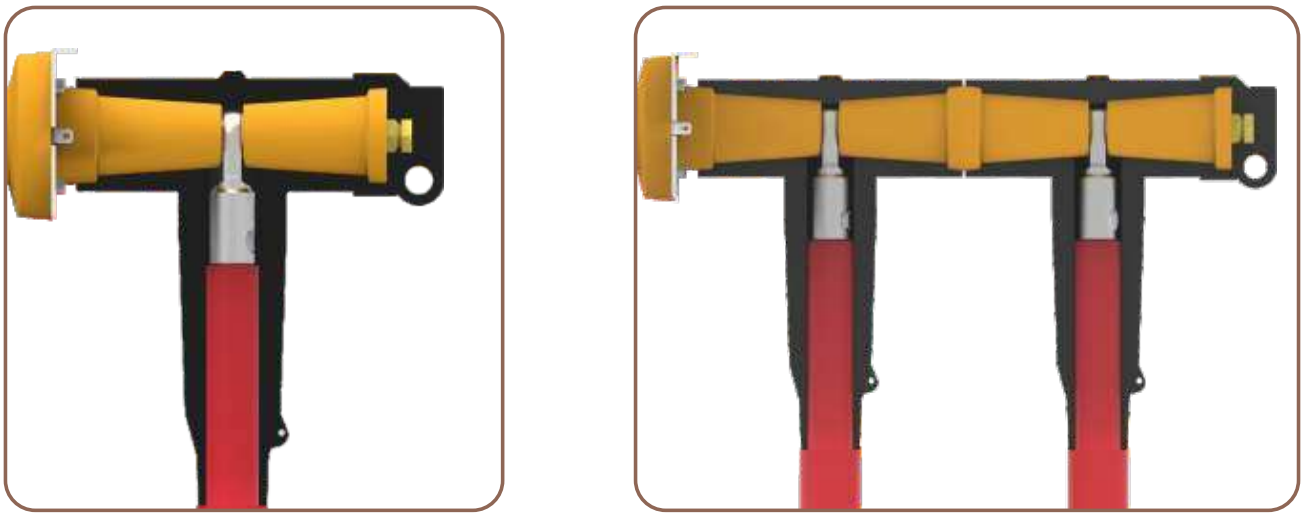

Figure 34: "T - Type" Cable Termination Alternatives

IGS-RM unit depth can be increased when there is a requirement for surge arrester mounting. Surge arresters are recommended if the unit is directly connected to overhead lines.

SBS 3-Way Compact Indoor Type RMU

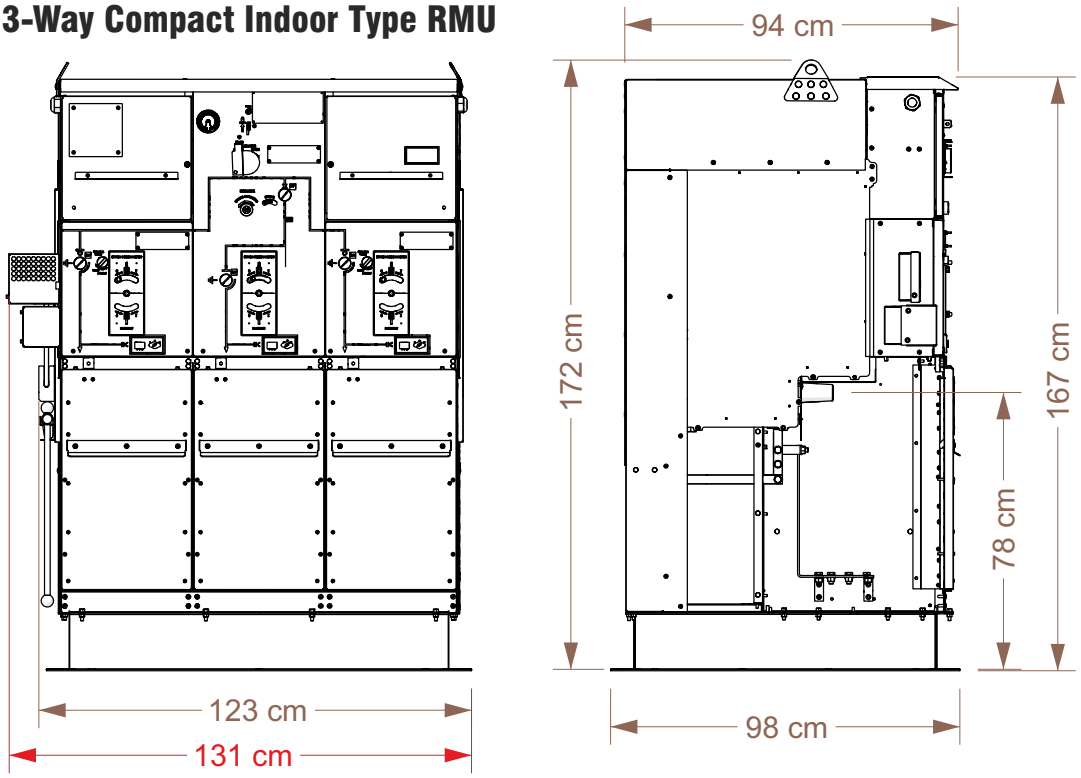

17,5 kV, 2 ring switches 400 A + 1 vacuum circuit breaker 200 A

SBS 3-Way Compact Outdoor Type RMU

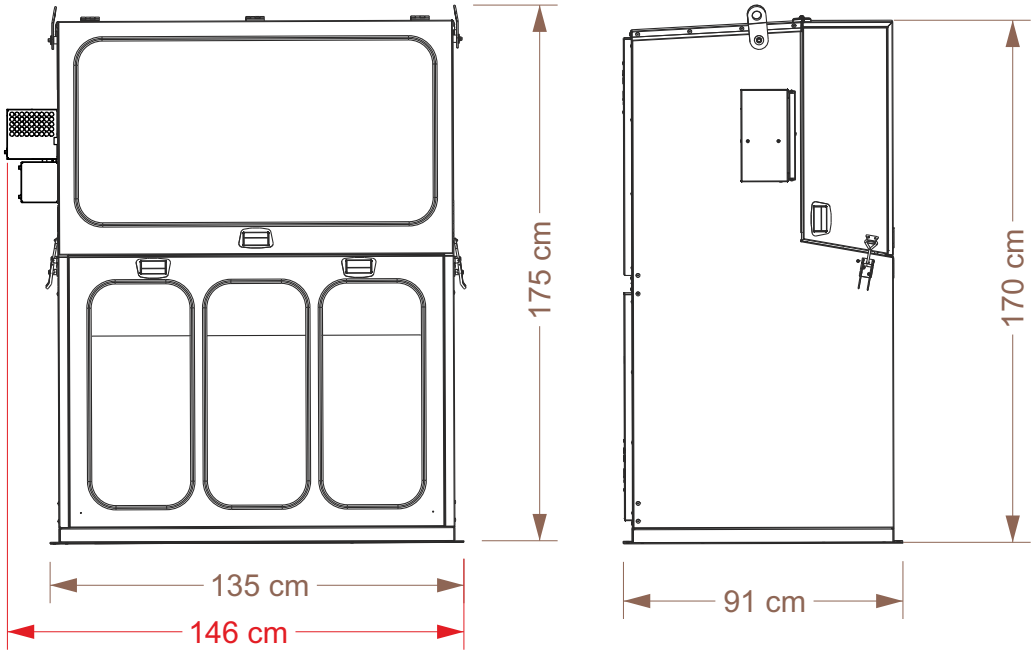

17,5 kV, 2 ring switches 400 A + 1 vacuum circuit breaker 200 A

SBBS and SSBS 4-Way Compact Indoor Type RMU

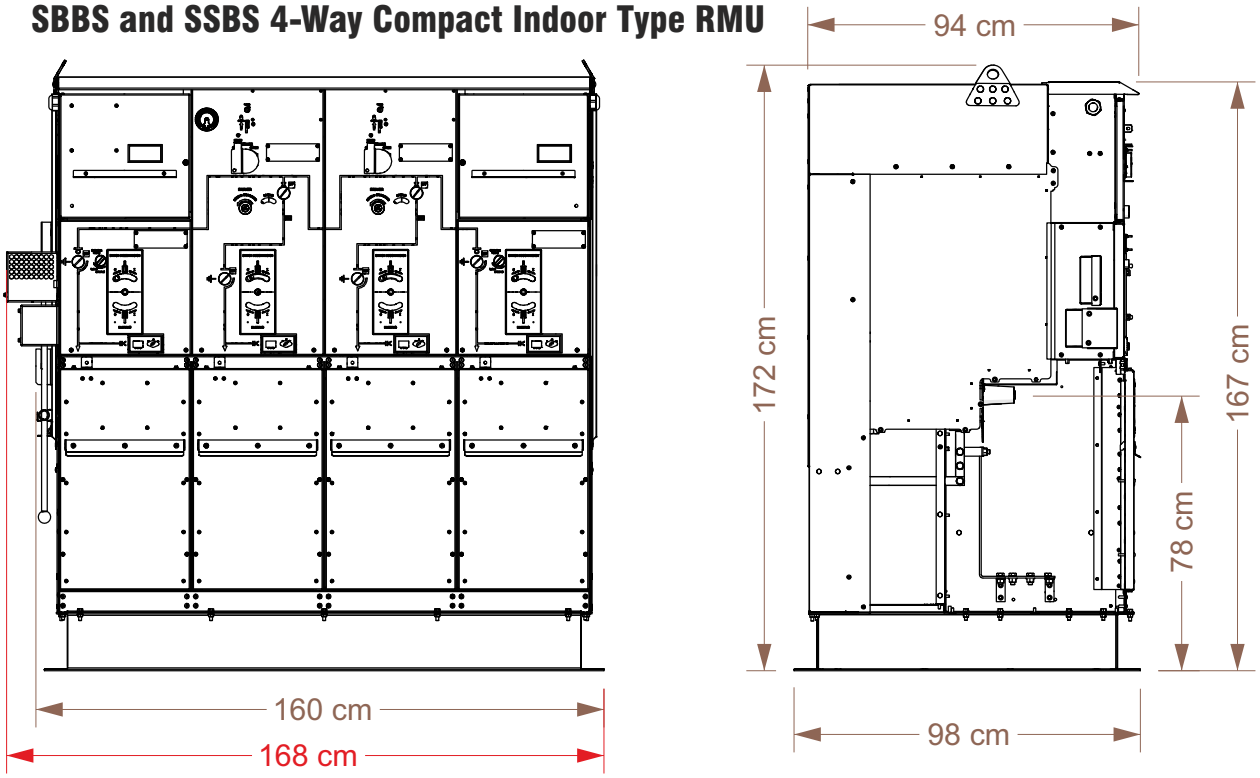

17,5 kV, 2 ring switches 400 A + 2 vacuum circuit breakers 200 A
17,5 kV, 3 ring switches 400 A + 1 vacuum circuit breaker 200 A

SBS 3-Way Compact Outdoor Type RMU

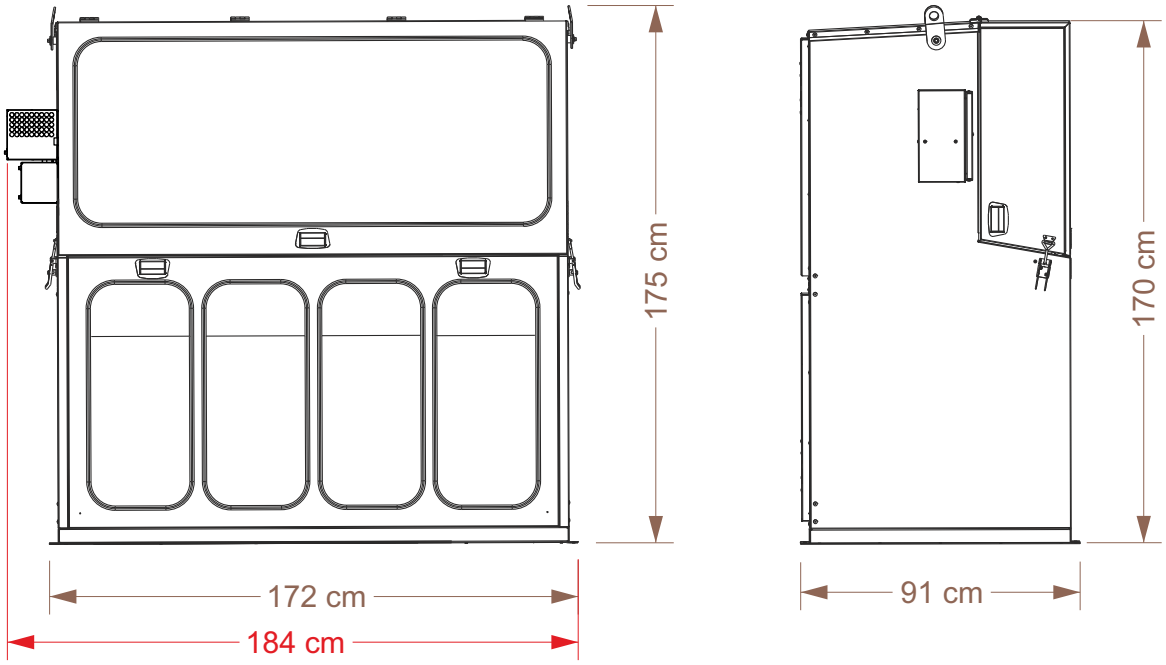

17,5 kV, 2 ring switches 400 A + 2 vacuum circuit breakers 200 A
17,5 kV, 3 ring switches 400 A + 1 vacuum circuit breaker 200 A

PACKING

For land (railway and highway) transportation

The equipment is;
- fastened to wooden base
- protected by a plastic cover

For air and sea transportation

The equipment is;
- packed in a wooden crate
- packed by using shrink-wrap and desiccant bags

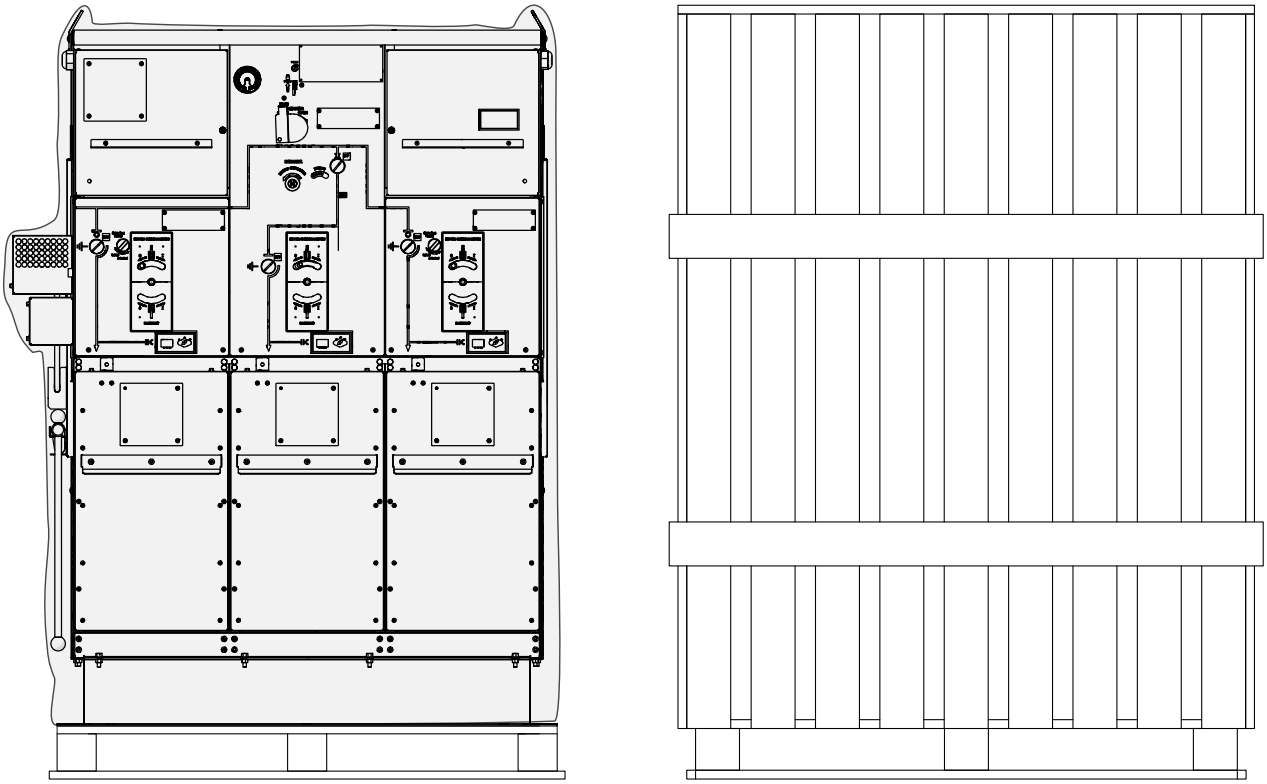

Figure 35: Packing Types

Handling

There are different packaging alternatives. It depends transportation method.

- For short distance (truck transport), wooden base and nylon cover are used.

- For long distance (air and sea), wooden base and wooden cover with nylon cover are used.

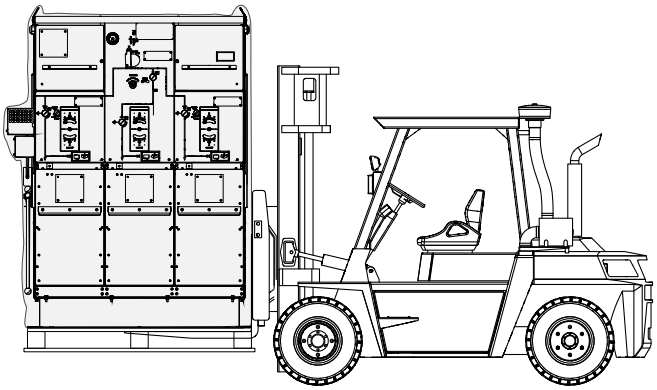

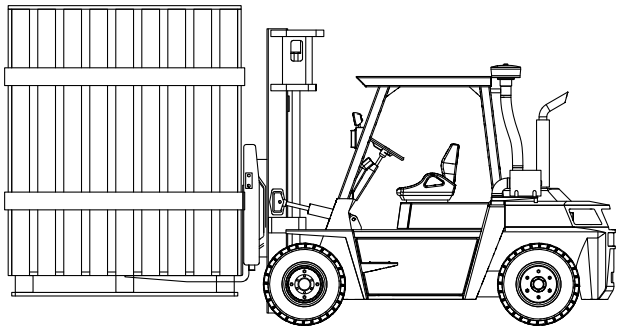

Package can be transported with forklift.

WARNING

Be sure that the forks of the truck are fully engaged throughout the entire width of the packaging base.

Note that with package total weight of;

- 3 way indoor: 850 kg
- 3 way outdoor: 1100 kg
- 4 way indoor: 1000 kg
- 4 way oudoor: 1300 kg

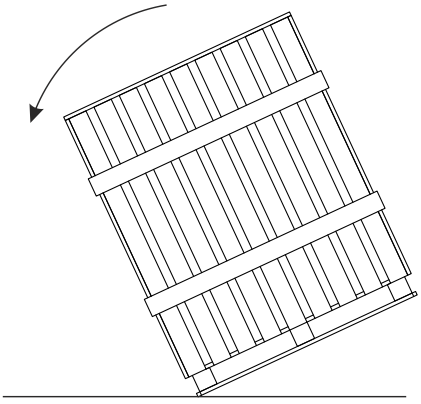

Never tip the crates over.

In order to lift or deposit the moving part on the handling table, make allowance for a jib crane (not supplied).

Handling *(ctd.)*

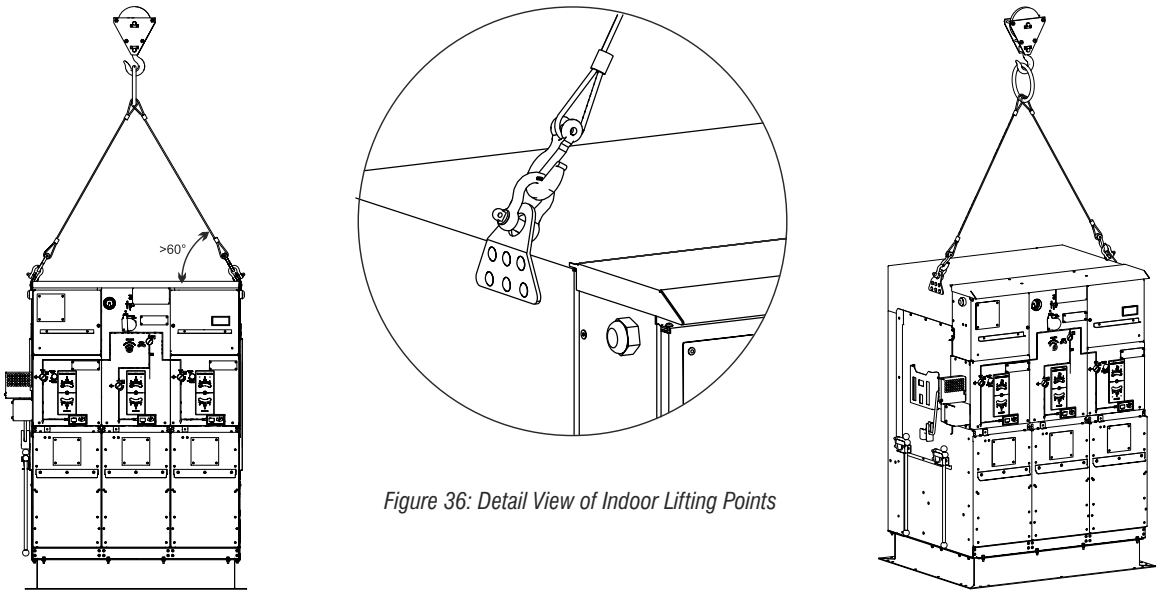

Figure 36: Detail View of Indoor Lifting Points

3-way or 4-way indoor switchgears can be lifted by two lifting points at the top. Hook of the lifting sling can be connected with or without U-bolt. The angle between sling and top surface shall be minimum 60° degrees. Be sure that lifting capacity of the rope is proper for the weight of products.

3-way and 4-way outdoor switchgears are lifted from four lifting points at the bottom of the cabinet. Hook of the rope can be connected with or without U-bolt. The angle between sling and top surface shall be minimun 60° degrees. Chain type rope can wear the paint out, therefore cloth tape sling is recommended.

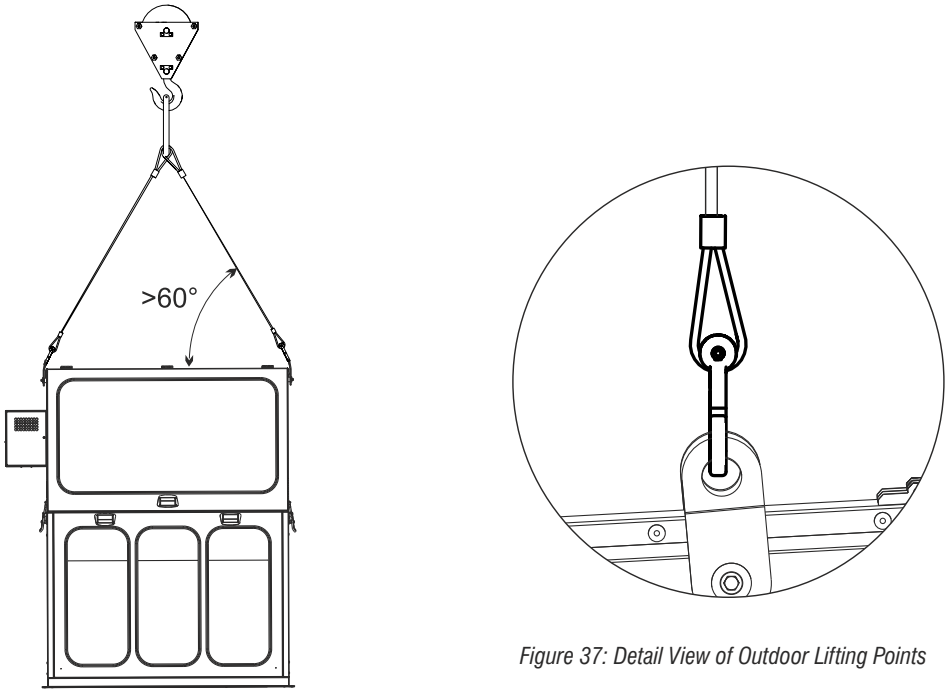

Figure 37: Detail View of Outdoor Lifting Points

Storage

The following should be satisfied for a smooth storage of the unit;

- The units' packaging should be in line with the demand of the storage duration.
- The package of the unit should not be removed or damaged.
- It is imperative not to store the equipment in premises with major and rapid temperature differences.
- There must not be any hazardous gases (like SO2) in the storage area.
- The storage area must protect the equipment against any eventual degradation agents; such as
  - Water & water vapor.
  - Saline atmosphere.
  - Pollution.

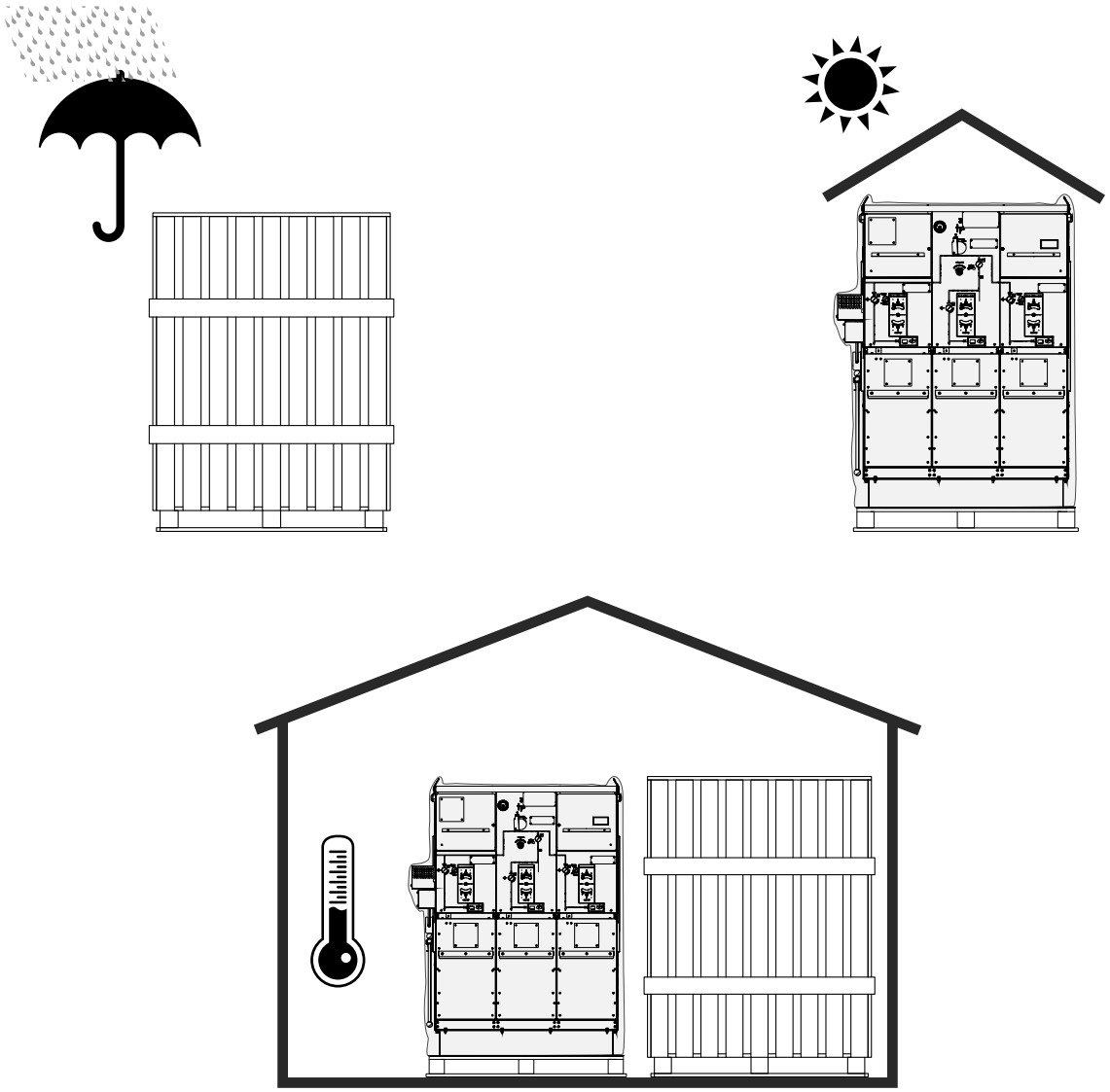

Figure 38: Storage Conditions

INSTALLATION

Unpackaging

For air and sea transportation

- Open the packaging of the equipment by the help of crowbar without damaging the goods.
- Cut the vacuumed section of the packing by the help of cutter.

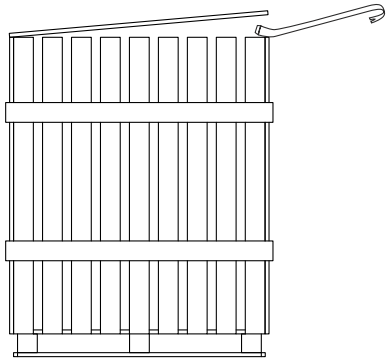

For land (railway and highway) transportation

- Cut the vacuumed section of the packing by the help of cutter

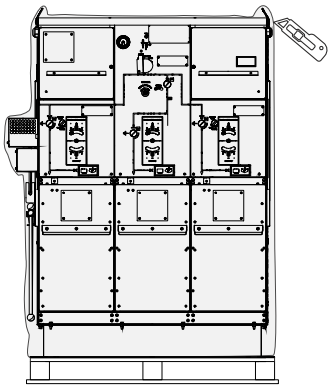

Checks after unpackaging

After removing the package of the equipment, please do the checks listed below. Contact your provider if you encounter a situation that does not in line with the instructions.

Gas Pressure Check

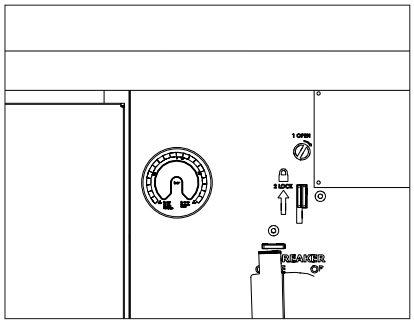

Check and confirm that if the gas pressure is between 1.1 – 1.2 bar. If the gas pressure value is not in the specified range, contact your provider.

Installation Manual Check



Ensure that there is an installation manual inside the equipment. Make the installation and the operation according to this manual. Pay attention to the warnings in the manual.

Operating Handle Check

Ensure that there is a Circuit Breaker Spring Charger Handle and Switch-Disconnector Operating Handle inside the package.

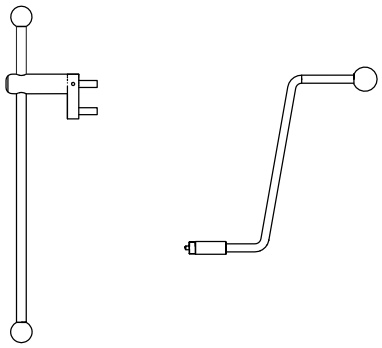

Mechanism Check

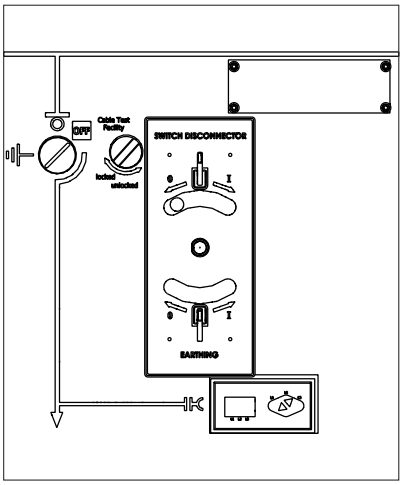

After unpackaging, make sure if the mechanism is on “OFF” position.

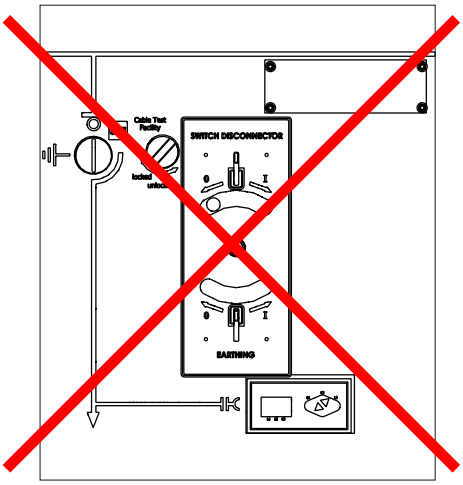

If the mechanism is not on “OFF” position, there may be a problem with the equipment. Please contact your provider.

Preparation of Assembly Area

The ground, where the equipment will be fixed, shall be like in the figure below.

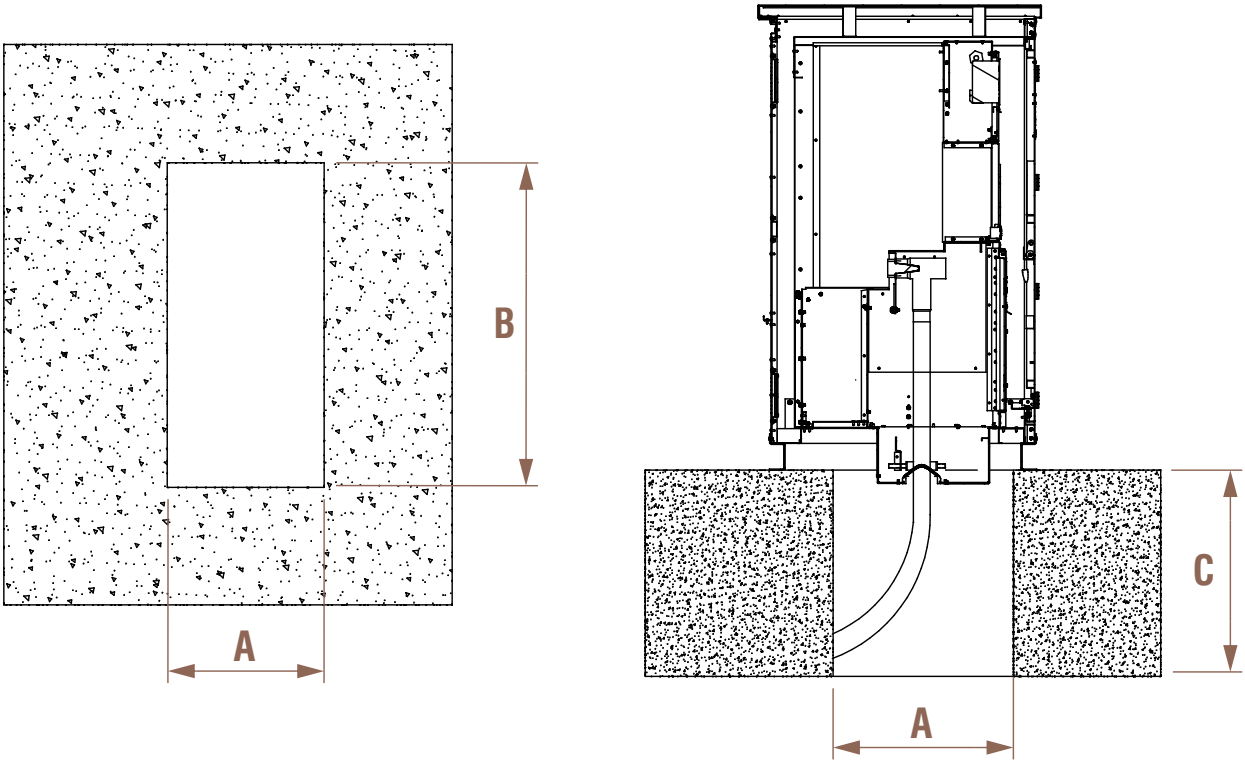

RMU Type	A [mm]	B [mm]	C [mm]
3-way Indoor	700	1060	1200
3-way Outdoor	630	1140	1200
4-way Indoor	700	1435	1200
4-way Outdoor	630	1510	1200

Installation Interface

The basement, where the equipment will be fixed, shall be prepared as below.

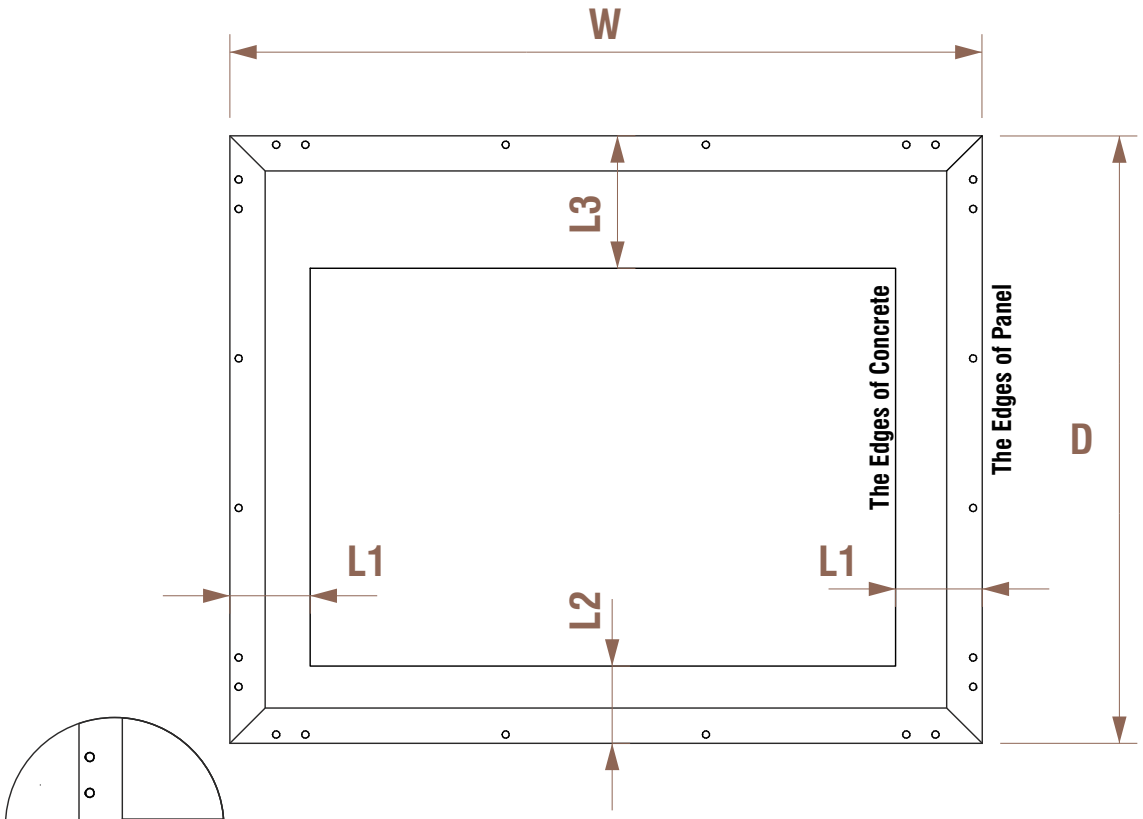

Front Side

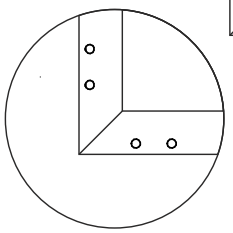

Fixing Holes

RMU Type	Width (W) [mm]	Depth (D) [mm]	L1 [mm]	L2 [mm]	L3 [mm]
3-way Indoor	1200	985	70	75	205
3-way Outdoor	1350	910	105	150	190
4-way Indoor	1575	985	70	75	205
4-way Outdoor	1660	910	105	150	190

SCADA / LEGACY AUTOMATION SYSTEM

Our range of RMUs is fully compatible with any SCADA network, thanks to limit switches, auxiliary switches and motorization kits.
Our teams possess the technical abilities to propose and provide full solution by fitting all related equipment in our panel based on customer requirements.

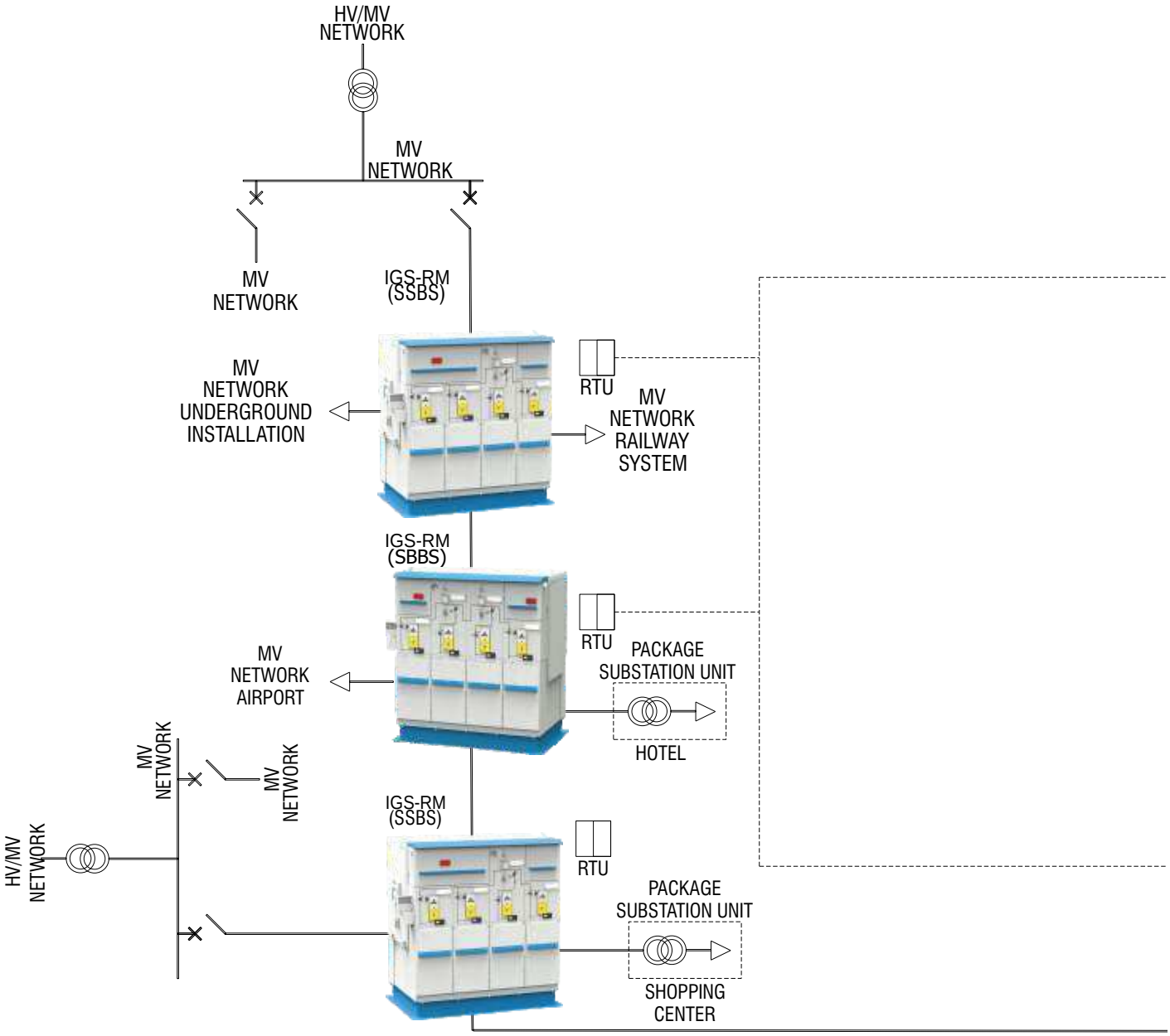

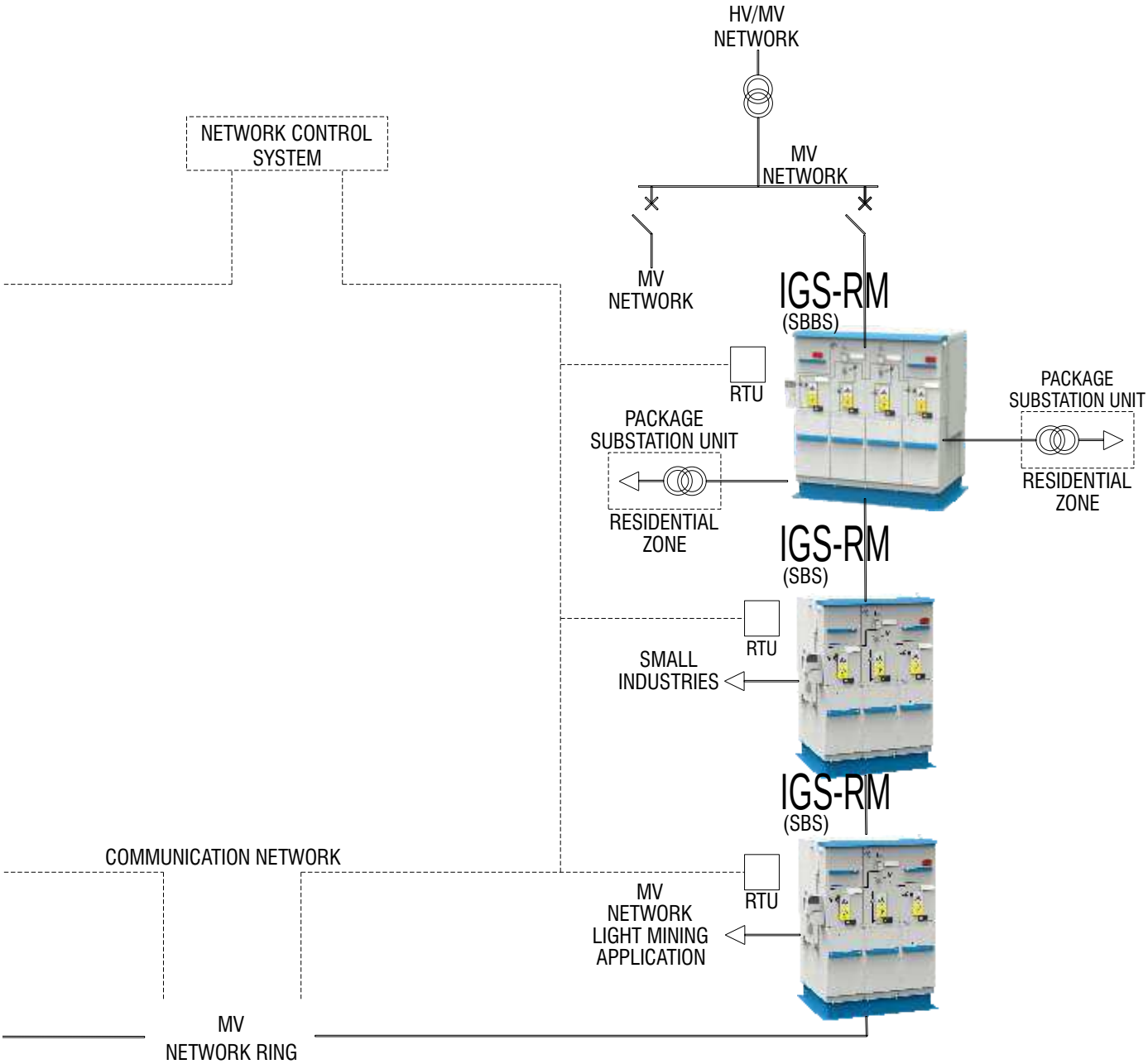
HV/MV
NETWORK
NETWORK CONTROL
SYSTEM
MV
NETWORK
MV
NETWORK
IGS-RM
(SBBS)
RTU
PACKAGE
SUBSTATION UNIT
PACKAGE
SUBSTATION UNIT
RESIDENTIAL
ZONE
RESIDENTIAL
ZONE
IGS-RM
(SBS)
RTU
SMALL
INDUSTRIES
IGS-RM
(SBS)
COMMUNICATION NETWORK
RTU
MV
NETWORK
LIGHT MINING
APPLICATION
MV
NETWORK RING

Smart Secondary Substation

Utilities are continuously trying to overcome the challenges arising from energy demand upturn and increasing ecological awareness worldwide. Using available resources in a more efficient way, by utilizing the cutting-edge technologies in IT and communications. This was the most acceptable answer for that issue and one of the simplest definitions for Smart Grid.
In order to facilitate and manage the huge aspirations of Smart Grid (e.s. Bi-directional power and communication flow, using distributed and renewable power sources, self-healing network) a highly sophisticated, computerized Distribution Automation System (DAS) is necessarily required.



According to Smart Grid philosophy, the required automation system is not only for monitoring and controlling like SCADA. The automation for the grid includes highly developed algorithms that - as a result - assist the distribution network operators in making the right decisions in acceptable time.
Furthermore, the system can minimize the number/duration of outages and maintain the power system main parameters (frequency and voltage) within acceptable limit. Eventually, the technical and non-technical losses/costs will be obviously reduced.
As a result of our permanent search for development and excellence, considering the global trend and the importance of Smart Grid implementation, we had agreements with two prominent companies; i.e. Sprecher and PSI, and hence IGS currently offers complete solution for Smart Secondary Substations (SSS).

- Power switches:
    - Ring Main Units
        * Self-powered; no need for any external power supplies
        * Indoor/outdoor up to 75 °C surface temperature
        * Local control board and DC system
    - Field RTUs
    - Software/system

IMPERIUM
GLOBAL SOLUTIONS

RING MAIN UNITS · SF6 GAS INSULATED SWITCHGEAR

WEBSITE
www.imperiumglobalsolutions.com

EMAIL
info@imperiumglobalsolutions.com

PHONE / WHATSAPP
+90 541 541 30 86

© 2026 Imperium Global Solutions. All rights reserved.